Perfecting the Power, Ranking the Life.

Sanhe Power Tech (Shenzhen) Co.,Ltd.
Building 6,2nd Industrial Park, Guanlong Xili, Nanshan District,Shenzhen, P.R,China, 518055
Tel：(86)755-26749992 +8613418990147
Fax：(86)755-26749991
E-mail：samwha2002@vip.163.com yvonne.zhang@samwha-cn.com
https://www.sanhenergy.com



Power Quality Solution

Active Power Filter (APF)
Static Var Generator (SVG)

www.sanhenergy.com

三和电力
SANHE POWER TECH

About SANHE

Leading brand of power quality solutions for the new energy industry

Sanhe Power Tech (shenzhen) Co.,Ltd established in 2002, is committed to the principle of “Care Profoundly, Carry out Persistently”. The company specializes in power quality products and has expanded its focus to encompass the development of photovoltaic renewable energy, electric vehicle charging systems, energy storage solutions, and hydrogen production technologies in recent years. Our dedication to innovation has positioned us at the forefront of the industry in the application of distributed new energy systems. We offer a comprehensive range of services, from product development and manufacturing to sales and after-sales support, providing our clients with tailored, end-to-end system solutions across a variety of sectors.

SANHE BASE

Sanhe's headquarter is located in Shenzhen, which mainly undertakes operational functions, and Sanhe's production base is located in Wuxi.



三和电力
SANHE POWER TECH

SANHE's Honors

Power quality expert, solving more than 5,000 scenarios

National High-tech Enterprise Certificate
AAA Credit Certificate
28 Patents
24 Software Copyrights
37 International and China standards
CE, COC, SGS ,GOST,CNAS Certificates
Shenzhen SRDI Enterprise etc.
Sanhe Power Tech is a member of interational committees such as:
The intemational Electrotechnical Commission (IEC),
The Institute of Electrical and Electronics Engineers (IEEE) etc,
The software development system has passed the CMMI
evaluation of the American SEI.



New energy development

Based on years of accumulation of power quality technology and experience, combined with new power electronics and advanced intelligent software and hardware technology, the company will continue to provide upgrade solutions for the traditional type of power system, and at the same time, it will also be closely involved in the construction and optimization of the new type of power system, so as to contribute to the industrial upgrading and the progress of the industry as well as to the sustained development of the world.

Power Quality and Sanhe Active PQ products

What is the power quality?

Power quality is a general term that describes the level of consistency, reliability, and stability of electrical power. It refers to the effects of AC power on a user's equipment when it exceeds a certain limit.- Four major issues in power quality:

·Low power factor
·High harmonics
·Unstable voltage
·Three-phase imbalance

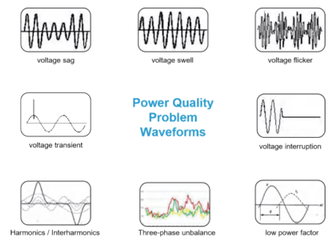

Power quality can be affected by many factors, including:



Implementation and Reference Standards

JB/T11067-2011 "Low-Voltage Active Power Filters"
GB7251-97 "Low-Voltage Switchgear and Controlgear Assemblies"
GB50052-95 "Design Code for Power Supply and Distribution Systems"
GB/T12325-2003 "Power Quality - Permissible Deviation of Supply Voltage"
GB/T 14549-93 "Power Quality - Public Grid Harmonics"
Electromagnetic Compatibility: EN55011, EN50081-2, EN61000-4-2, EN61000-4-3, EN61000-4-4, EN61000-4-5, EN61000-4-6, EN61000-6-2
Harmonic Control Reference Standards: EN 61000-3-4, IEEE 519-1992(2022)

Harmonics

Harmonic currents are currents with frequencies that are integer multiples of the fundamental power frequency. Harmonics can cause power quality issues and can negatively impact equipment and system efficiency. Harmonics can be caused by non-linear loads.

Such as：	
Variable frequency drives	Electrical motors driven by inverters
Battery chargers	Laser printers etc.
Machinery with rapid fluctuations in load current or voltage	
Switched mode power supplies used by electronic equipment such as computers, monitors, televisions, and LED lighting	

三和电力
SANHE POWER TECH

Harmonic Standard IEEE 519 (2022)

Below is Table 1, from IEEE 519 (2022), p17, “Voltage distortion limits”， as outlined below:

Bus voltage V at PCC	Individual harmonic(%)h≤50	Total harmonic distortion THD(%)
V≤1.0 kV	5.0	8.0
1 kV<V≤69 kV	3.0	5.0
69 kV<V≤161 kV	1.5	2.5
161kV<V	1.0	1.50

Table 2 (IEEE 519-2022, pg.19) current distortion limits for systems rated 120 V through 69 kV

Maximum Harmonic Current Distortion In Percent Of I_L						
Individual Harmonic Order[b]						
I_{sc}/I_L	2≤h<11[a]	11≤h<17	17≤h<23	23≤h<35	35≤h≤50	TDD
<20[C]	4.0	2.0	1.5	0.6	0.3	5.0
20<50	7.0	3.5	2.5	1.0	0.5	8.0
50<100	10.0	4.5	4.0	1.5	0.7	12.0
100<1000	12.0	5.5	5.0	2.0	1.0	15.0
1000	15.0	7.0	6.0	2.5	1.4	20.0

a For h≤ 6, even harmonics are limited to 50% of the harmonic limits shown in the table.
b Current distortions that result in a dc offset, e.g., half-wave converters, are not allowed
c Power generation facilities are limited to these values of current distortion, regardless of actual Isc/IL unless covered by other standards with applicable scope.
Where:
ISC = maximum short-circuit current at PCC
IL= maximum demand load current at PCC under normal load operating conditions

Reactive power issue

Reactive power is the power that oscillates between the source and the load due to the presence of inductive or capacitive components in an electrical circuit. It is measured in units called volt-amperes reactive (VAR) .Reactive Power Charges are a charge made by the Distribution Network Operator and passed through to the customer via their electricity bill.

Unbalanced Load

When an electrical load consumes a different amount of electrical current in each phase, it is called an Unbalanced Load.

APF/SVG-Ultra Slim Model

- Simpler button control design.
- Minimum internal cable, optimal air duct layout ensure better heat dissipation: working under environment temp up to 55°C;
- PWM fan speed control and intelligent algorithms ensure high efficiency under low load and increase the fan service life



Dimension Drawing

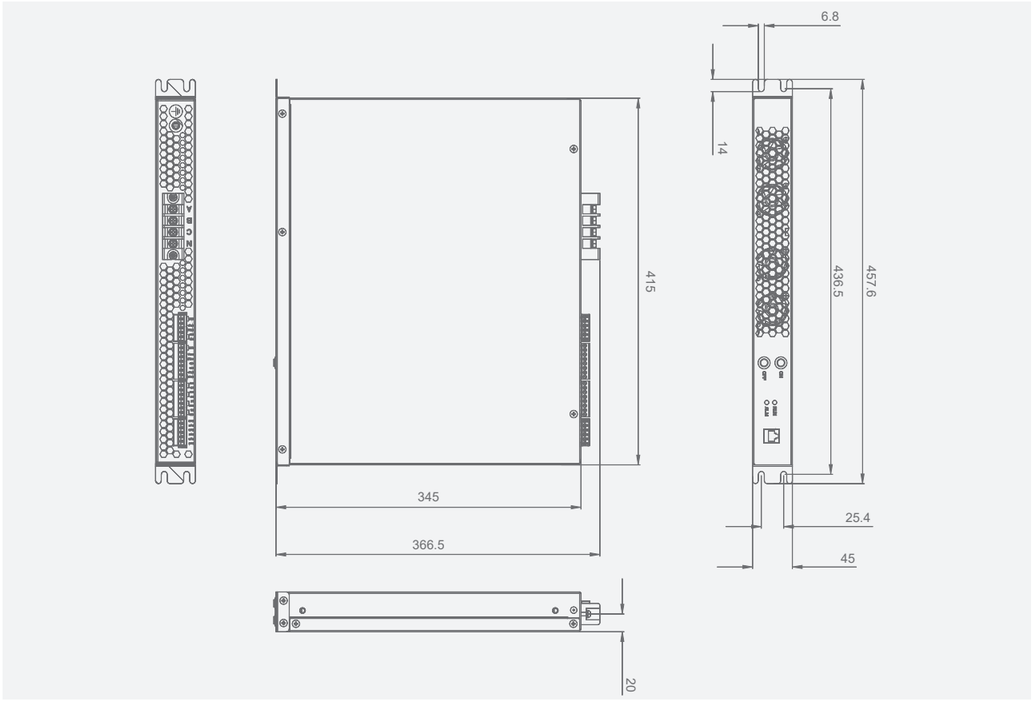

Specification

Module Parameters	
Rated Voltage	400VAC
Power Capacity	APF 15, ASVG 10Kvar
System Parameter	
Rated input voltage	400Vac (-20%~+15%)
Rated operating frequency	50Hz/60Hz (-3Hz~+3Hz)
Number of parallel connections	1
Efficiency & Losses	Efficiency ≥97% (3ph), ≤15 W/A Loss
Grid structure	Three-phase four-wire or three-phase three-wire
Current transformer	150:5~10,000:5
Performance Indicators	
Full response time	< 5ms
Target power factor	-1~+1, capacitive inductive continuously adjustable
Compensation mode	Harmonic suppression / reactive power compensation / unbalance compensation, 11 modes in any combination
Noise indicator	< 60dB
Communications Monitoring	
Communications interface	RS485, Network Port
Communications protocol	Modbus, TCP/IP, CAN
Module display interface	Mechanical Keys, LED Indicators, Separate Touch Screen
Mechanical Property	
Mounting Options	rackmount
W×D×H(mm)	340×410×45
Net weight	7.5kg
Chassis height	45mm
Enclosure	Galvanized Steel, RAL7035 Coating， customized on request
CT position	Grid sense (at main) or Load sense
Environmental Requirements	
Altitude	≤1500m; between 1500m~3000m, according to GB/T3859.2, the power will be reduced by 1% for every 100m increase.
Operating temperature	-40℃~+55℃
Equipment storage and transportation temperature	-45℃~+70℃
Relative humidity	0~95%, No condensation
Class of pollution	Pollution Level III
Related Qualifications and Standards	
Standards compliance	IEEE519、IEC6100-3-6、ER G5/4、CE，EMC Compliance: EN 61000-6-4 Class A

APF/SVG Distributed Model

- Equipped with 4.3 Inch touch screenor manual input panel: simple & userfriendly HMI
- Minimum internal cable, optimal airduct layout ensure better heat-dissipation: working under envi-ron-ment temp up to 55°C;
- PWM fan speed control and intelligentalgorithms ensure high efficiencyunder low load and increase the fanservice life



Rackmount

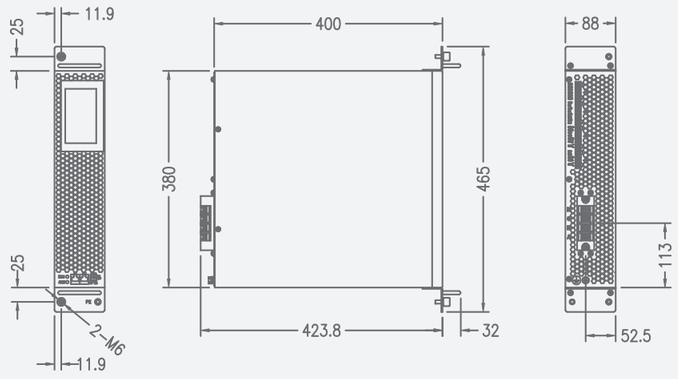

Plug-in

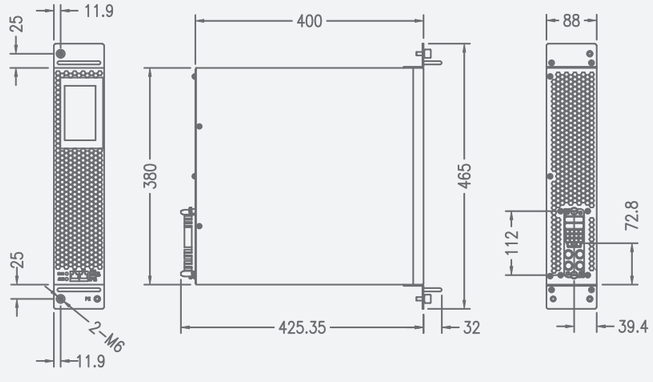

Specification

Module Parameters		
Rated Voltage	400VAC	
Power Capacity	APF 30A, 50A; SVG 30Kvar, 35Kvar	
System Parameter		
Rated input voltage	400Vac (-20%~+15%)	
Rated operating frequency	50Hz/60Hz (-3Hz~+3Hz)	
Number of parallel connections	≤8units	
Efficiency & Losses	Efficiency ≥97% (3ph), ≤15 W/A Loss	
Grid structure	Three-phase four-wire or three-phase three-wire	
Current transformer	150:5~10,000:5	
Performance Indicators		
Full response time	< 5ms	
Target power factor	-1~+1, capacitive inductive continuously adjustable	
Compensation mode	Harmonic suppression / reactive power compensation / unbalance compensation, 11 modes in any combination	
Noise indicator	< 60dB	
Communications Monitoring		
Communications interface	RS485, Network Port	
Communications protocol	Modbus, TCP/IP, CAN	
Module display interface	4.3 inch touch screen or 2.5 inch keypad screen, LED indicators	
Mechanical Property		
Mounting Options	rackmount	hot swappable
W×D×H(mm)	380×424×88	380×425×88
Net weight	11.5kg	
Chassis height	2U	
Enclosure	Galvanized Steel, RAL7035 Coating， customized on request	
CT position	Grid sense (at main) or Load sense	
Environmental Requirements		
Altitude	≤1500m; between 1500m~3000m, according to GB/T3859.2, the power will be reduced by 1% for every 100m increase.	
Operating temperature	-40℃~+55℃	
Equipment storage and transportation temperature	-45℃~+70℃	
Relative humidity	0~95%, No condensation	
Class of pollution	Pollution Level III	
Related Qualifications and Standards		
Standards compliance	IEEE519、IEC61000-3-6、ERC554、CE，EMC Compliance EN61000-6-4 Class A	

APF/SVG Anti-Pollution High Efficiency SIC Models

- Ultra-high efficiency, up to 99% efficiency
- Ultra-compact body, same height for all series 100mm
- Built-in 4G/Wifi module (optional)
- Resistant to high-pollution high-dust harsh environment
- Foolproof wiring design reduces field and service workload



Rackmount

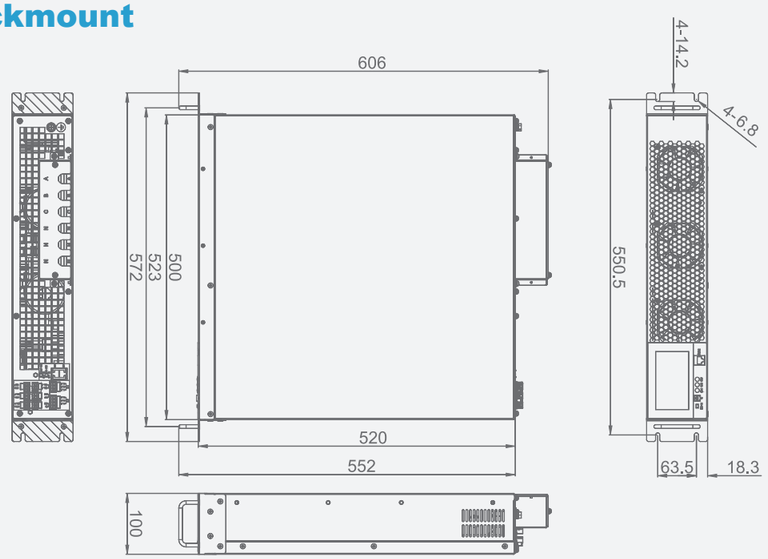

Specification

Module Parameters				
Rated Voltage	400VAC (208V, 480V please contact us)			
Rated Current	APF 50A	APF 75A	APF 100A	APF 150A
Power Capacity	SVG 35Kvar	SVG 50Kvar	SVG 75Kvar	SVG 100Kvar
System Parameter				
Rated input voltage	400Vac (-20%~+15%)			
Grid frequency	50Hz (range: 47Hz-53Hz), 60Hz (range: 57Hz-63Hz)			
Number of paraliel connections	≤16units			
Efficiencies	Up to 99% / Up to 99%			
Grid structure	Three-phase four-wire or three-phase three-wire			
Current transformer	150/5~10,000/5			
Performance Indicators				
Harmonic Compensation Range	2nd-51st Order (Amplitude Adjustable)			
Harmonic Attenuation	THD<3% (Closed Loop)			
Quick response time	< 25μs			
Full response time	< 5ms			
Target PF	-1~+1			
Noise indicator	< 60dB			
Communications Monitoring				
Communication interface	RS485, Network Port			
Communication protocols	Modbus Protocol, TCP/IP, CAN			
Module display interface	4.3 inch touch screen LED indicator			
Mechanical Property				
Mounting Options	Wall-mounted / Rail-mounted			
WxDxH(mm)	500X520X100			
Net weight	25kg	27kg	29kg	35kg
Enclosure	Galvanized Steel, RAL7035 Coating，customized on request			
CT position	Grid sense (at main) or Load sense			
Environmental Requirements				
Aititude	≤1500m; between 1500m~4000m, according to GB/T3859.2, the power will be reduced by 1% for every 100m increase.			
Operating temperature	-40℃~+55℃			
Relative humidity	5%~95%, No condensation			
Protection level	IP20, Other IP levels can be customized			
Related Qualifications and Standards				
Standards compliance	IEEE519、IEC6100-3-6、ER G5/4、CE，EMC Compliance: EN 61000-6-4 Class A			