Perfecting the Power,Ranking the Life.

Sanhe Power Tech (Shenzhen) Co.,Ltd.

Tel:0755-2674 9992 /+86 13418990147

E-mail:samwha2002@vip.163.com yvonne.zhang@samwha-cn.com

Website:www.sanhenergy.com

Address:Building 6,2nd Industrial Park,

Guanlong Xili, Nanshan District,Shenzhen, P.R,China

Postal Code:518055

Wechat official account

Disclaimer:This brochure has been compiled to be as comprehensive and accurate as possible based on available information. However, the company reserves the right to modify data, specifications, and other details without prior notice. Sanhe Power Tech(Shenzhen) Co., Ltd. retains the final right of interpretation.

三和电力
SANHE POWER TECH

PRODUCTS BROCHURE

New Power System–Complete Equipment and System Solutions



Sanhe Power Tech (Shenzhen) Co.,Ltd.

Company Profile

Sanhe Power Tech (Shenzhen)Co.,Ltd. is a national high-tech enterprise and a national "Little Giant" enterprise specializing in niche markets. With power electronics technology at its core, it focuses on the research and development of power quality products and system solution services, and has been deeply involved in the industry for over 20 years. Driven by technological innovation and based on the foundation of power quality, the company has expanded into smart microgrids and various new types of power system applications. It has accumulated technical scenarios in distributed energy fields such as energy storage systems, photovoltaic power, green electricity hydrogen production, and electric vehicle energy replenishment.

In line with the national "dual carbon" strategy, the company actively lays out the "new quality productivity" of the new power system. Its subsidiary, Wuxi Lifeng Energy Storage Co., LTD., focuses on energy storage research and development, while Wuxi Lifeng Electric Co., Ltd. is responsible for the research and dvelopment and production of key equipment, jointly promoting industrial upgrading.

The company's main business includes
A full range of products and complete solutions for power quality detection and control.
Distributed new energy system products and advanced solutions.
Strong and weak current engineering based on "dual carbon" and energy efficiency management.

In the past more than 20 years, adhering to the values of "Care Profoundly, Carry out Persistently", the company has accumulated a large number of clients in industries related to national economy and people's livelihood, including large central enterprises such as China National Petroleum Corporation and China Petroleum & Chemical Corporation, infrastructure enterprises Shenzhen Water And Enviroment Group, and high-end manufacturing enterprises such as BYD and Inovance Technology.

Based on years of accumulation in power quality technology and experience, Sanhe Power Tech will combine new power electronics and advanced intelligent software and hardware technologies. While continuously providing upgrade solutions for traditional power systems, it will closely participate in the construction and optimization of new power systems, contributing to industrial upgrading, industry progress, and even the sustainable development of the coun**try.**

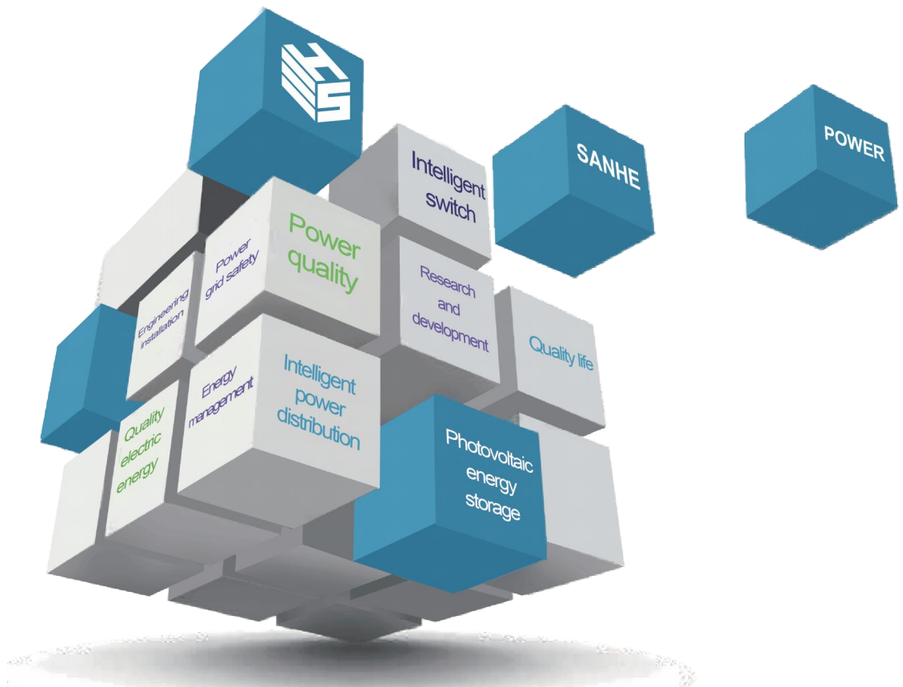

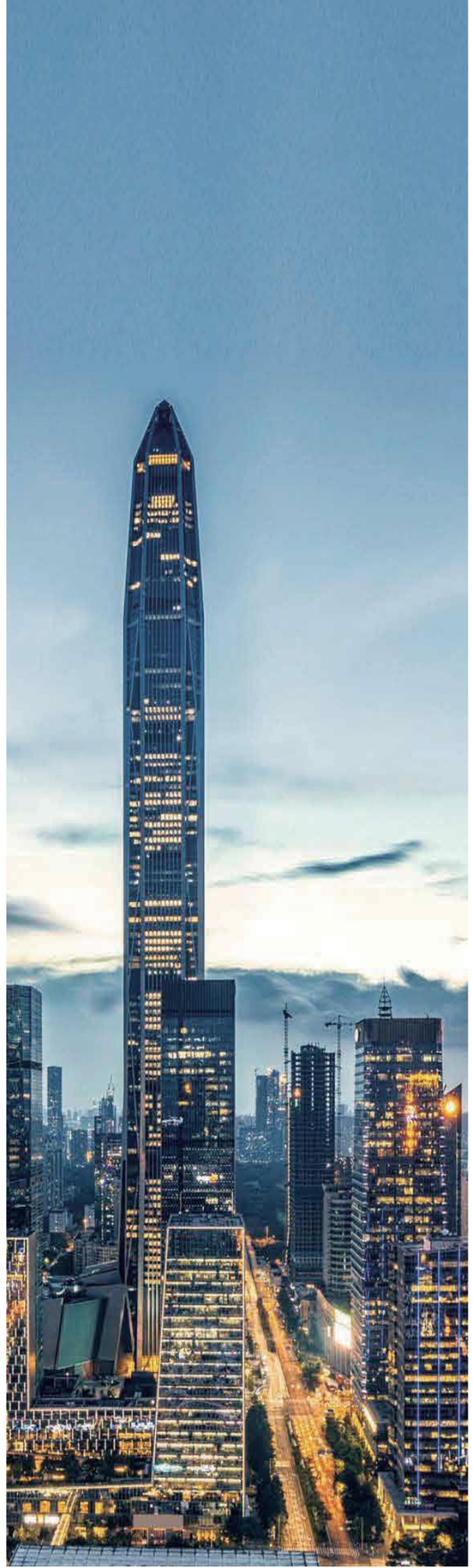

www.sanhenergy.com

Contents

Honors and qualifications ····· 01
Research and development strength ····· 03
cooperative partner ····· 05
Industrial and commercial energy storage products ····· 07
Household energy storage products ····· 15
Smart Energy Management platform ····· 23
Wind-solar-diesel storage and charging solutions ····· 25
"He" System · Intelligent + New Energy Distributed System ····· 27
Comprehensive energy conservation, consumption reduction and carbon reduction ····· 29
Green electricity hydrogen production solution ····· 31
SPW060C series hydrogen production DC power supply complete set equipment ····· 33
Zero-carbon park microgrid solution ····· 35
Power quality ····· 37
HVCS series High-voltage reactive power centralized compensation device ····· 39
The HVCA series of high-voltage devices without automatic compensation ····· 43
HVC series High-voltage reactive power compensation device ····· 47
HVPF series high-voltage passive harmonic filter ····· 51
HSVG series High-voltage static reactive power generation device ····· 57
LVCT series Low-voltage dynamic reactive power compensation device ····· 61
LVCA series Low-voltage static reactive power compensation device ····· 65
LVCM series Low-voltage modular dynamic reactive power compensation device ····· 69
LSVG series Low-voltage static reactive power generation device ····· 73
LVAF series low-voltage active power filter device ····· 77
LDVR series Dynamic voltage recovery device ····· 81
SZPW8 series high-frequency switching DC power supply screen ····· 85
SUAR series three-phase unbalance automatic regulation device ····· 87
SDUR series three-phase unbalanced cable distribution box ····· 91

Certification & Honor

Since its establishment, Sanhe Power Tech (Shenzhen) Co.,Ltd. has been constantly enhancing its own strength and undertaking social responsibilities, accumulating rich honors and qualifications.

National High-tech Enterprise

National-level "Little Giant" enterprises specializing in niche markets

AAA Credit rating

A council member of the China Electrical Equipment Industry Association

The software development system has passed the CMMI assessment of SEI in the United States

Obtained the second-level qualification for general contracting of power and the fourth-level construction permit for power installation, renovation and testing

ISO9001 Quality Management System

ISO14001 Environmental Management System

ISO18001 Occupational Health and Safety Management System Certification

...

The company's multiple technologies lead the industry's development. It holds over 30 patents and more than 20 software Copyrights. As a major writing unit, it has participated in the formulation of over 40 international and domestic standards.











Product Qualifications

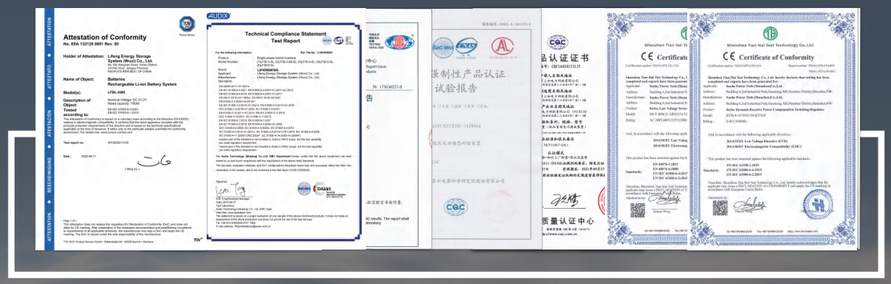

Product Standards



Invention Patent



Software Copyright



Research And Development Strength

- Over 20 years of dedication to the power technology sector
- The annual R&D investment exceeds 10% of the total sales
- R&d personnel account for 38% of the total number of employees in the company
- Equipped with a product testing platform and full-process testing capabilities, it ensures outstanding product quality and performance.
- More than 20 software Copyrights
- More than 30 invention patents
- More than 40 national and industry standards
- Jointly developed with research institutions such as Tsinghua University, Xi 'an Jiaotong University, and the Chinese Academy of Sciences
- Introduce IPD and adhere to the product development model of IPD integrated product development +CMMI software capability maturity model
- Constantly upgraded and updated solutions and products









cooperative partner

ABB
SAMSUNG E&A
bp
BASF We create chemistry
TBEA
JinKO Solar
Linde
HEIDELBERGCEMENT GROUP
BYD
JA SOLAR
LONGi
SUNGROW
CanadianSolar
BAOSTEEL
KONKA
REPT BATTERO
SINOPEC
CNPC
GCL
CNBM | sinoma
CSSC 中国船舶集团有限公司 CHINA STATE SHIPBUILDING CORPORATION LIMITED
中国海油 CNOOC
国家管网 PipeChina
MCC 中冶集团
华润 China Resources
中国国电 CHINA GUODIAN
神华集团 SHENHUA GROUP
国投 SDIC
中国铁建
天津金鹏集团 Tianjin Jinpeng Group KINBON
双汇 Shineway
赛科 SECCO

Commercial & Industrial ESS

Industrial and commercial energy storage is a solution designed for industrial and commercial users, primarily used for peak shaving, improving power quality, and providing emergency power supply. It charges during off-peak hours and discharges during peak periods, helping businesses reduce electricity costs. It also ensures critical equipment continues operating during grid failures or power outages, enhancing power supply reliability.

- It is composed of an integrated energy storage cabinet with integrated energy storage batteries, energy storage converters, EMS and a distribution cabinet. It can be used for pure energy storage in industrial and commercial use, and can also be externally connected to photovoltaic systems to maximize economic benefits.
- During peak hours or at night, the energy storage battery discharges to supply power to the load.
- The grid-connected mode can store energy for the battery during off-peak periods.
- View data in real time through the energy management platform.

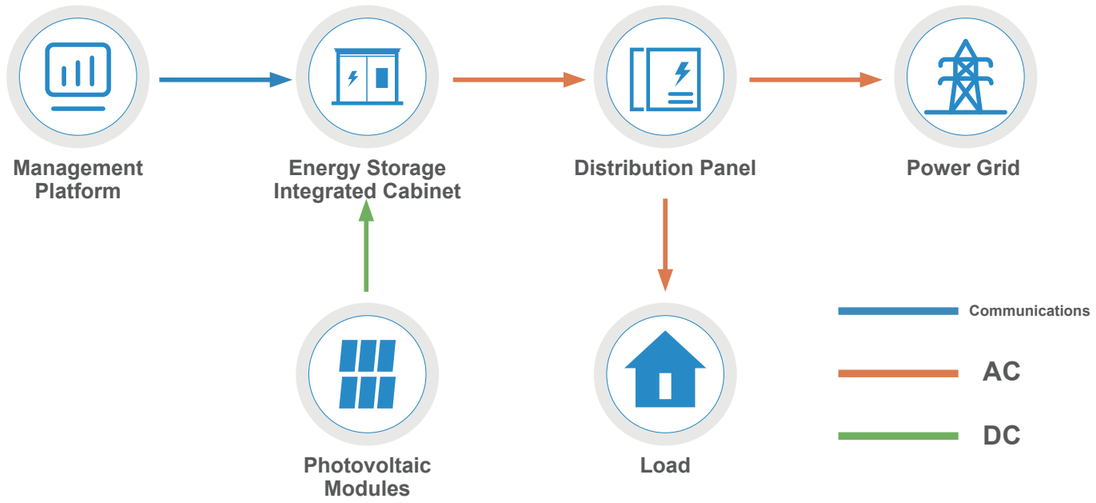

Business Model

Peak-Valley Arbitrage

Assist users in charging during low-cost electricity periods and discharging during high-cost periods, enabling them to profit from peak-off-peak price differentials and reduce electricity costs

Backup power supply

During power rationing or outages, it serves as a backup power source for industrial parks and enterprises, preventing losses from production stoppages.

Demand Response

Reduce peak power consumption and maximum demand to lower capacity charges.

Dynamic Capacity Expansion

When the existing distribution network capacity is insufficient, reduce the cost of transformer retrofitting and capacity expansion through distribution storage.

Electricity Trading

On the power market trading platform, conduct short-term power transactions in conjunction with load forecasting to maximize revenue.

Application Scenarios

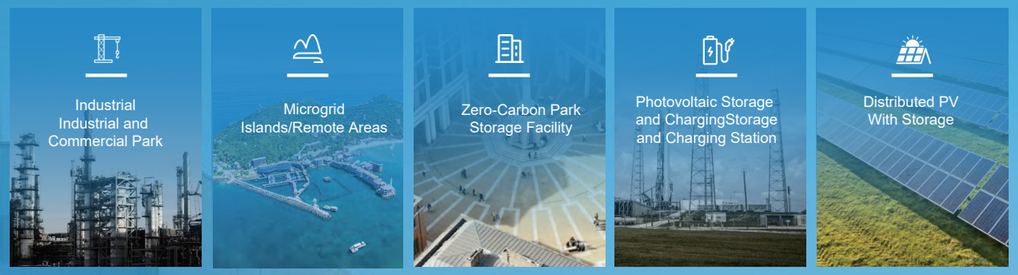

Product Features

Safe and reliable
- The battery cells are sourced from top-tier brands, featuring Grade A cells.
- Fire Protection Active and Passive Safety Design
- Safety Early Warning Algorithm Early identification and handling

Flexible configuration
- Supports parallel operation
- Integrated transport, easy installation
- Modular design for easy maintenance and upgrades

Light and storage share the same lifespan
- Long-Life Battery Cell Guarantee
- PACK Long-Life Guarantee, Liquid-Cooled Piping
- System Long-Life Design

Income Protection
- High efficiency ensures returns, next-generation SiC technology
- Smart Variable-Frequency Cooling
- Optimized Modeling and Solving Mechanism for Charge-Discharge Management

Highly integrated
- All-in-one design, pre-installed lightweight EMS
- Integrated photovoltaic, storage, AC/DC distribution modules

Intelligent Control
- Cloud-Edge-Device Collaborative Control, Powered by Big Data Algorithms
- Remote monitoring and configuration, streamlined and convenient operations and maintenance
- Strategy Optimization Algorithm, Maximizing Client Returns

Air-Cooled Hybrid Solar ESS Cabinet

⬆10%
Enhanced total lifetime discharge capacity

⬇10%
Reduced auxiliary power consumption during operation

>8000
High Cycle Life LFP Battery Cell Cycle Life > 8000 Cycles

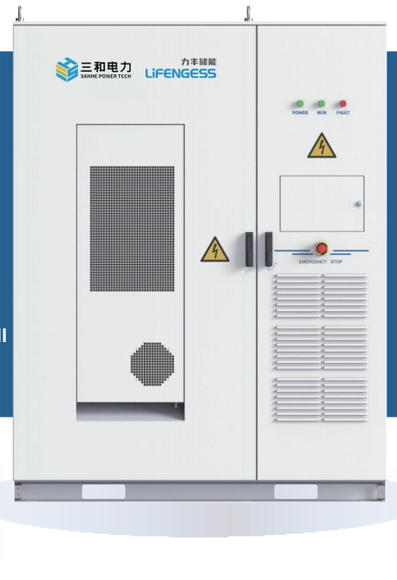

Highly Integrated
Factory-installed lightweight EMS
Integrated photovoltaic, storage, AC/DC distribution modules
Flexible Application
Freely configurable PV modules
Supports grid-tied/off-grid switching
Three-phase four-wire system, accommodates unbalanced loads
Active Safety System
Temperature sensors, smoke detectors, combustible gas detectors
Perfluorohexane/aerosol fire suppression, water-based fire suppression

System topology

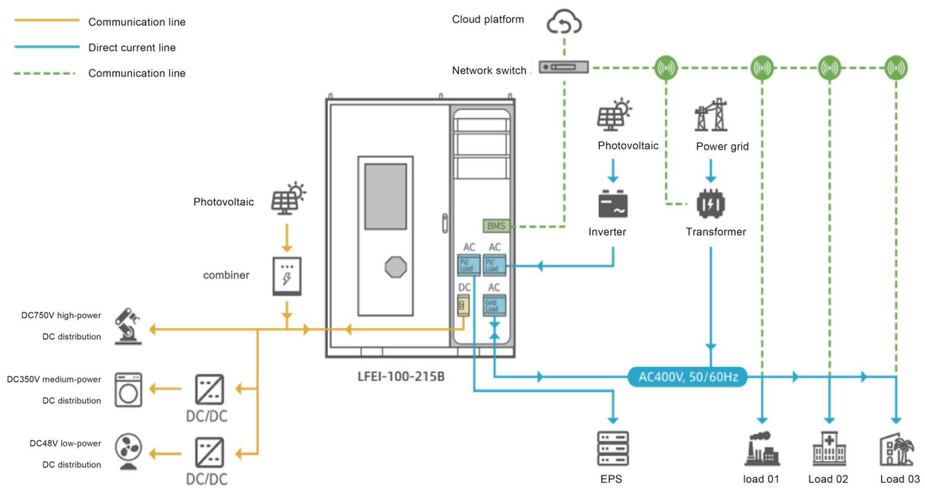

Product parameters

Product model	LFEI-100-215
Dc side parameters	
Battery specifications	LFP280Ah
Rated voltage	768V
Voltage range	600-876V
Rated capacity	280Ah
Rated energy	215kWh
Ac side parameters	
Rated output power	105kW
Rated grid voltage	400V
Communication access method	Three-phase three-wire/three-phase four-wire
Power grid frequency range	50Hz/60Hz
Total harmonic distortion rate of current	≤3%（Full load）
Power factor	-0.99 - +0.99
Photovoltaic parameters	
Maximum input power	50/100kW
Maximum open-circuit voltage on the PV side	1000V
Voltage range on the PV side	200-850V
Maximum input current on the PV side	200A
MPPT channels	1
Short-circuit current	2000A
System Specification	
Weight	2.6t
Dimensions (W*D*H)	1750*1215*2340mm
Maximum system efficiency	89%
Straightening	MPPT、STS、PCS
Charge and discharge rate	0.5P
Cooling method	air cooling
Working temperature	-20-55℃
Relative humidity	0%-95%,RH
Altitude	≤2000m
Fire protection configuration	PACK level + aerosol
Protection grade	IP54
Number of cycles	≥6000@25℃,0.5C,90%DOD,70%EOL
Communication interface	RS485、Ethernet、4G
Communication protocol	Modbus、61850

All-in-one Liquid-cooled ESS Cabinet

⬆10%
Enhanced total lifetime discharge capacity

⬇10%
Reduced auxiliary power consumption during operation

>8000
High Cycle Life LFP Battery Cell
Cycle Life > 8000 Cycles

Silicon Carbide PCS
Three-phase four-wire system, maximum efficiency >98.5% Next-generation silicon carbide technology
Dual-scenario application for both grid-connected and off-grid operation
Three-phase four-wire system
Supports both grid-connected and off-grid applications
Active Safety Systems
Thermal-sensitive, smoke-sensitive, combustible gas detectors
Perfluorohexane/aerosol fire suppression , water-based fire suppression

Liquid-Cooled Fin Heat Dissipation Technology

High heat transfer capacity

Boundary-free heat transfer surface；
Fins agitate fluid for exceptional heat exchange performance

Excellent temperature uniformity

Straight-through finned structure with looped microchannel flow path design;
PACK temperature differential control <3°C

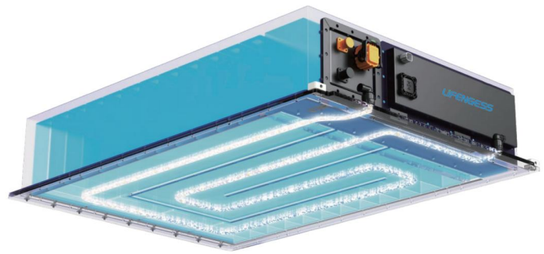

All in One

PACK
Battery Module

PCS
Energy Storage Converter

EMS
Energy Management System

BMS
Battery Management System

TMS
Temperature Control Management System

FSM
Smart Fire Protection System

Product parameters

Product model	LFEI-100-233	LFEI-125-260	LFEI-125-233	LFEI-215-418
Dc side parameters				
Battery specifications	LFP280Ah	LFP314Ah	LFP280Ah	LFP314Ah
Rated voltage	832V	832V	832V	1331.2V
Voltage range	650-949V	728-923V	728-923V	1045-1518.4V
Rated capacity	280Ah	314Ah	280Ah	314Ah
Rated energy	232.96kWh	260kWh	233kWh	418kWh
Standard charge and discharge current	140A（0.5P）	157A	140A	157A
Maximum charge and discharge current	160A（0.5P）	194A	160A	194A
Dc protection	Circuit breaker +FUSE	Circuit breaker +FUSE	Circuit breaker +FUSE	Circuit breaker +FUSE
Cooling method	Liquid cooling	Liquid cooling	Liquid cooling	Liquid cooling
Battery system configuration	1P260S	1P260S	1P260S	1P416S
Ac side parameters				
Rated charging and discharging power	100kW	125kW	125kW	209kVA
Maximum charging and discharging power	110kW	150kW	150kW	230kW
Rated charge and discharge current	145A	182A	182A	302A
Rated grid voltage	400V	400V	400V	400/690V
Communication access method	Three-phase three-wire/ three-phase four-wire	Three-phase three-wire/ three-phase four-wire	Three-phase three-wire/ three-phase four-wire	Three-phase three-wire
Power grid frequency range	50Hz/60Hz	50Hz	50Hz	50/60Hz
Total harmonic distortion rate of current	≤3%（Full load）	<3%（Rated power）	<3%（Rated power）	<3%（Rated power）
Power factor	>0.99	>0.99	>0.99	>0.99
System Specification				
System efficiency	≥88%	≥88%	≥88%	≥88%
Number of cycles	≥6000@25℃,0.5C 90%DOD,70%EOL	≥6000@25℃,0.5C, 90%DOD,70%EOL	≥6000@25℃,0.5C 90%DOD,70%EOL	≥6000@25℃,0.5C, 90%DOD,70%EOL
Weight	2.5t	2.73t	2.73t	4t
Dimensions (W*D*H)	1000*1350*2350mm	1175*1300*2310mm	1175*1300*2310mm	1400*1300*2450mm
Charge and discharge rate	0.5P	0.5P	0.5P	0.5P
Working temperature	-20-55℃	-20-55℃	-20-55℃	-20-55℃
Relative humidity	0%-95%,RH	0%-85%,RH	0%-85%,RH	0%-95%,RH
Altitude	≤2000m	≤2000m	≤2000m	3000m
Fire protection configuration	PACK grade + perfluorohexanone	IP54	IP54	IP54
Protection grade	IP54	PACK grade + perfluorohexanone	PACK grade + perfluorohexanone	PACK grade perfluorohexanone
Communication interface	RS485、Ethernet、4G	RS485、Ethernet	RS485、Ethernet	RS485、Ethernet
Communication protocol	Modbus、61850	Modbus、61850	Modbus、61850	Modbus、61850

20-ft ESS Container



System topology

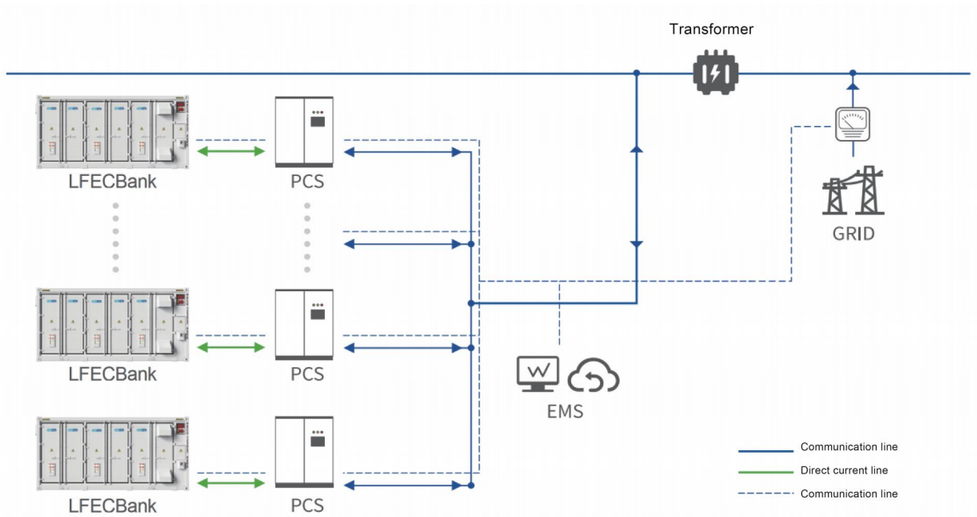

Product features

Safe and reliable
Battery cells utilize top-tier brands, Grade A cells;
Pre-assembled and tested prior to shipment;
Distributed air conditioning automatic temperature control system design.

Smart BMS
Integrated with intelligent BMS, cloud-edge collaboration enables rapid status monitoring and fault logging for early warning and fault localization.

Reliable quality assurance
High-standard quality control system;
End-to-end quality assurance and control mechanisms

Comprehensive Services
10-year global warranty;
One-stop localized support

Product parameters

Product model	LFEC-5000
Dc side parameters	
Battery type	LFP314Ah
Rated electrical quantity	5015.96kWh
Rated voltage of the battery	1331.2V
Battery voltage range	1164.8-1500.0V
Weight	43t
Dimensions (W*D*H)	6058*2438*2896mm
Maximum system efficiency	94%
Charge and discharge rate	0.5P
Number of cycles	> 6000@25℃ 0.5C/0.5C,90%DOD，70%EOL
Cooling method	Liquid cooling
Altitude	≤2000m
Working temperature	-20 - 55℃
Relative humidity	0%-95%，RH
Protection grade	IP54
Communication interface	Ethernet/RS485/CAN/4G
Communication protocol	Modbus TCP/Modbus RTU/CAN 2.0
Fire protection configuration	Perfluorohexanone + water spray

Residential ESS

Residential energy storage systems employ a DC-coupled configuration, seamlessly integrating photovoltaic generation with energy storage. This approach effectively stores surplus electricity produced by the PV system, substantially increasing self-consumption rates and significantly reducing dependence on the utility grid.Photovoltaic storage systems maximize economic benefits by leveraging peak-off peak electricity price differentials for arbitrage operations—selling electricity during peak hours and storing it during off-peak periods. Moreover, users can utilize these systems to help alleviate grid load while qualifying for policy subsidies tied to grid support activities, thereby securing substantial economic returns. This approach strikes an optimal balance between energy conservation, emissions reduction, and financial gains.

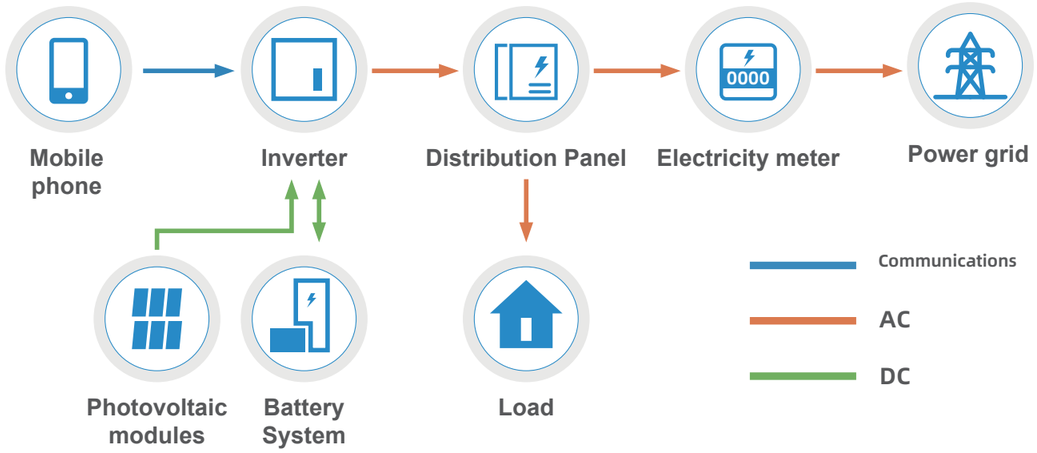

Product Features

Easy to install

Modular design for easy installation and flexible compatibility;
Compact size and lightweight construction;
Quick-connect design.

Safe and reliable

Premium Grade A LFP battery cells;
Full lifecycle battery management;
Thermal runaway safety warning protection;
Automotive-grade design philosophy with redundant protection;
High protection rating: IP65

Highly efficient and energy-saving

High battery system efficiency;
High inverter efficiency;
Low-power mode;
High-efficiency control strategy

Environmentally friendly

Low noise, low pollution;
Excellent human-machine interaction;
Seamlessly integrates into the home;
Recyclable and reusable.

Smart Surveillance

Cloud-based real-time monitoring;
Remote intelligent operations and maintenance;
Backend AI big data analytics;Cloud-edge collaborative dual management

High cost-performance r atio

Equal performance, better price;
Same price, superior performance;
Low total cost of ownership;
Product customization for different regions.

Application Scenarios

High-cost electricity zones

When sunlight is abundant, photovoltaic power generation supplies household electricity, with excess energy stored in energy storage devices. When sunlight is insufficient, stored batteries discharge to provide power, reducing dependence on the grid and saving on electricity bills.

Peak-Valley Arbitrage

In regions with significant peak-to-off-peak electricity price differentials, energy storage systems charge during off-peak hours and discharge during peak hours to supply household electricity or sell power, leveraging the price differential to reduce electricity costs and increase revenue.

Power-deficient areas

In remote areas where grid power is difficult to reach and regions with inadequate power grid infrastructure, photovoltaic storage systems meet daily electricity needs.

EV charging

The power capacity of household distribution systems cannot meet the demands of EV fast charging; power amplification is achieved through the integration of storage solutions.

Farm Facilities

Overseas farms feature extensive facilities, high electricity consumption, and significant power loads. Photovoltaic storage systems address the electricity demands of these farm facilities.

Product Features

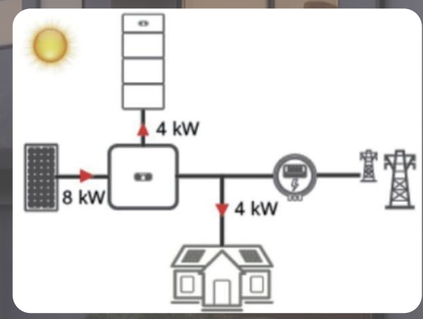

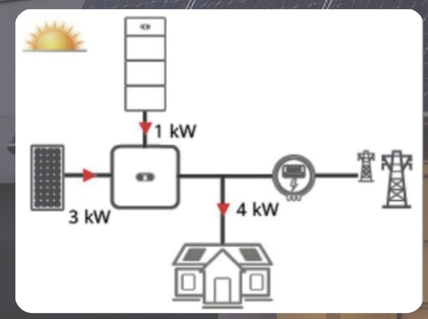

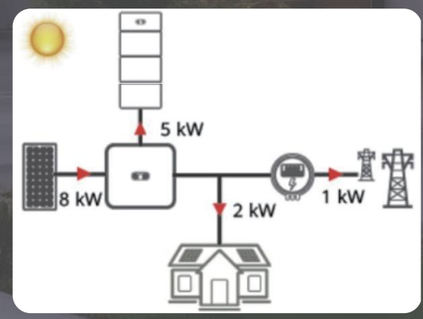

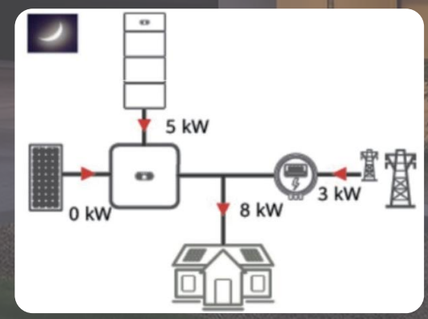

Grid-tied Inverter





Single-Phase Energy Storage Inverter

Three-Phase Energy Storage Inverter

	LFSI-3-SL	LFSI-3.68-SL	LFSI-4-SL	LFSI-5-SL	LFSI-6-SL	LFSI-5-TH	LFSI-6-TH	LFSI-8-TH	LFSI-10-TH	LFSI-12-TH
Photovoltaic input										
Maximum input voltage (V)	550	550	550	550	550	1100	1100	1100	1100	1100
Rated input voltage (V)	380	380	380	380	380	630	630	630	630	630
MPPT voltage operating range (V)	100~530	100~530	100~530	100~530	100~530	150~950	150~950	200~950	200~950	200~950
Independent MPPT channels	2	2	2	2	2	2	2	2	2	2
Maximum input current (A)	16/16	16/16	16/16	16/16	16/16	20/20	20/20	20/20	20/20	20/20
Maximum short-circuit current (A)	20/20	20/20	20/20	20/20	20/20	30/30	30/30	30/30	30/30	30/30
Battery										
Communication method	CAN / RS485	CAN / RS485	CAN / RS485	CAN / RS485	CAN / RS485	CAN	CAN	CAN	CAN	CAN
Battery voltage range (V)	40-58.6	40-58.6	40-58.6	40-58.6	40-58.6	120-600	120-600	120-600	120-600	120-600
Maximum charge (Discharge)(A)	100	100	100	100	100	30	30	30	30	30
Ac output (power grid)										
Rated output power (kw)	3	3.68	4	5	6	5	6	8	10	12
Rated grid voltage (V)	L/N/PE 220/230/240	L/N/PE 220/230/240	L/N/PE 220/230/240	L/N/PE 220/230/240	L/N/PE 220/230/240	3/N/PE, 220/380V 230/400V, 240/415V	3/N/PE, 220/380V 230/400V, 240/415V	3/N/PE, 220/380V 230/400V, 240/415V	3/N/PE, 220/380V 230/400V, 240/415V	3/N/PE, 220/380V 230/400V, 240/415V
Rated grid frequency (Hz)	50/60	50/60	50/60	50/60	50/60	50/60	50/60	50/60	50/60	50/60
Rated output current (A)	13.1	16	17.4	21.7	26.1	7.3	8.7	11.6	14.5	17.4
Power factor	0.8leading …0.8 lagging	0.8leading …0.8 lagging	0.8leading …0.8 lagging	0.8leading …0.8 lagging	0.8leading …0.8 lagging	0.8leading …0.8 lagging	0.8leading …0.8 lagging	0.8leading …0.8 lagging	0.8leading …0.8 lagging	0.8leading …0.8 lagging
Total harmonic distortion r ate of current	<3% Rated Output Power	<3% Rated Output Power	<3% Rated Output Power	<3% Rated Output Power	<3% Rated Output Power	<3% Rated Output Power	<3% Rated Output Power	<3% Rated Output Power	<3% Rated Output Power	<3% Rated Output Power
Efficiency										
Maximum efficiency	97.6%	97.6%	97.6%	97.6%	97.6%	98.4%	98.4%	98.4%	98.4%	98.4%
European efficiency	97.0%	97.0%	97.0%	97.0%	97.0%	97.9%	97.9%	97.9%	97.9%	97.9%
Conventional parameters										
Protection grade	IP66	IP66	IP66	IP66	IP66	IP66	IP66	IP66	IP66	IP66
Operating temperature (°C)	-25~60	-25~60	-25~60	-25~60	-25~60	-25~60	-25~60	-25~60	-25~60	-25~60
Environmental humidity (%)	0~95	0~95	0~95	0~95	0~95	0~100	0~100	0~100	0~100	0~100
Altitude (m)	3000	3000	3000	3000	3000	3000	3000	3000	3000	3000
Cooling method	Natural Convection	Natural Convection	Natural Convection	Natural Convection	Natural Convection	Natural Convection	Natural Convection	Natural Convection	Natural Convection	Natural Convection

Stacked Battery Pack





Low-voltage Battery Pack

Model	LFBL-5	LFBL-10	LFBL-15	LFBL-20
System parameters				
Number of modules	1	2	3	4
Rated electric capacity (kwh)	5.12	10.24	15.36	20.48
Maximum charge (discharge) current (A)	100	200	210	210
Communication method	CAN			
Battery voltage range (V)	40-58.4			
Cell type	LiFePO4			
Rated capacity of the battery cell (Ah)	100			
Rated battery voltage (V)	51.2			
Conventional parameters				
Module dimensions (width/depth/height)(mm)	630*185*320	630*185*640	630*185*960	630*185*1280
Total weight (kg)	48.6	94.6	140.6	186.6
Protection grade	IP66			
Operating temperature range (°C)	Charge: -8~58			
	Discharge: -18~58			
Environmental humidity (%)	0~95			
Altitude (m)	3000			
Installation location	Indoor (Outdoor)			
Installation method	Floor type			
Storage temperature range (°C)	-20~60			
Number of cycles	6000			
Cycle efficiency	≥95%			
Certification and Standards	TUV/IEC 62619/IEC 62040/IEC 61000/UN38.3			
Cooling method	Natural Convection			

High-voltage Battery Pack

Model	LFBH-10	LFBH-12.5	LFBH-15	LFBH-17.5	LFBH-20
System parameters					
Number of modules	4	5	6	7	8
Rated electric capacity (kwh)	10.24	12.8	15.36	17.92	20.48
Maximum charge (discharge) current (A)	25	25	25	25	25
Communication method	160~233.6	200~292	240~350.4	280~408.8	320~467.2
Battery voltage range (V)	204.8	256	307.2	358.4	409.6
Cell type	LiFePO4				
Rated capacity of the battery cell (Ah)	50				
Rated battery voltage (V)	CAN				
Conventional parameters					
Module dimensions (width/depth/height)(mm)	540*390*730	540*390*860	540*390*990	540*390*1120	540*390*1250
Total weight (kg)	137	167.5	198	228.5	30.5
Protection grade	IP65				
Operating temperature range (°C)	Charge: 0~50				
	Discharge: -20~50				
Environmental humidity (%)	0~95				
Altitude (m)	3000				
Installation location	Indoor (Outdoor)				
Installation method	Floor type				
Storage temperature range (°C)	-20~45				
Number of cycles	6000				
Cycle efficiency	≥95%				
Certification and Standards	IEC 62619 / EN 61000 & IEC 62040 / UN38.3				
Cooling method	Natural Convection				

Off-grid Inverter and Integrated Battery Pack

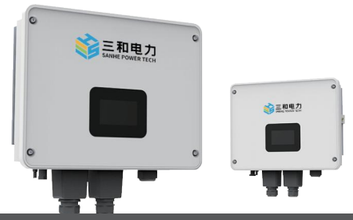

Off-grid Energy Storage Inverter

Model	LFOI-5-SL	LFOI-6-SL
PV Input		
Max. DC Input Voltage (V)	500	500
MPPT Voltage Range (V)	100~490	100~490
No. of MPP Trackers	1	1
Max. Input Current (A)	32	32
Max. Short-circuit Current (A)	37	37
Battery		
Battery communication mode	CAN / RS485	CAN / RS485
Battery voltage range (V)	40~58	40~58
Maximum charging(discharge)current (A)	100	120
Output (Grid)		
Rated Output Power (kW)	5	6
Rated Output Voltage (V)	230	230
Rated AC Frequency (Hz)	50/60	50/60
AC output rated current (A)	21.7	26
Power Factor	0.8leading …0.8 lagging	0.8 leading …0.8 lagging
Max. total harmonic distortion	<3% Rated Output Power	<3% Rated Output Power
GEN Input		
Max. Intput Power (kW)	5	6
Max. Intput Current (A)	21.7	26
General Data		
Ingress Protection	IP65	IP65
Operating Temperature Range (°C)	-25~60	-25~60
Relative Humidity (%)	0~95	0~95
Operating Altitude (m)	2000	2000
Cooling	Natural Convection	Natural Convection



Integrated Low-Voltage Battery Pack

Model	LFBLM-10-B	LFBLM-16-B
System Data		
Rated electric quantit (kWh)	10.24	16.08
Maximum charging current (A)	100	160
Maximum discharge current(A)	100	160
Rated capacity of battery cell (Ah)	200	314
Battery communication mode	R5485/CAN	
Battery voltage range (V)	40~58.4	
Cell type	LiFePO4	
Rated battery voltage (V)	51.2	
General Data		
Module size (width/depth/height) (mm)	780 / 180 / 550	413 / 233 / 826
Total weight (kg)	88	130
Ingress Protection	IP54	
Operating temperature range (°C)	Charge:0~50	
	Discharge:-20~60	
Installation position	Indoors	
Installation method	floor	
Number of cycles	6000	
Certification and Standards	UN38.3	
Cooling	Natural Convection	

Smart Energy Management platform

Leveraging years of digital operations and maintenance expertise, Sanhe has developed a proprietary smart energy management platform utilizing advanced digital technologies including IoT, cloud computing, big data, artificial intelligence, and mobile internet. This platform delivers integrated intelligent services for new energy and power generation/distribution stations, encompassing holistic condition monitoring, precise fault diagnosis, automated equipment inspections, optimized O&M decision-making, and real-time performance evaluation-digitally empowering power plant operations management.

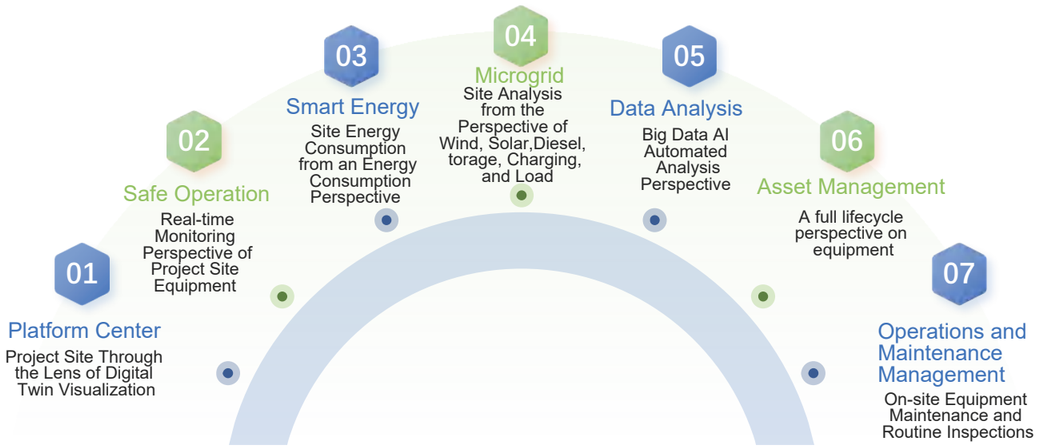

Smart Energy Management Platform Built on the “Source-Grid-Load-Storage” Model



Core Functionality



Technical Features

Openness

The platform service is open, supporting third-party application integration. It allows users to customize development or replace services, enabling personalized menu configuration .

Scalability

The system adopts an open architecture that supports third -party application access and integration, enabling personalized configuration of menus and interfaces for flexible expansion.

Safety

Multiple security mechanisms ensure protection: two-factor authentication, data encryption , scenario-based authentication, off-site database backup, and access control policies.

Maintainability

The system features log analysis and communication data logging capabilities, enabling rapid identification and resolution of maintenance issues.

Stability

Multi-node redundant hot backup ensures service stability; Internet disconnection resume functionality safeguards data security, with the capability to restore up to 7 days of historical data.

Integrated Circuit and Module

Establish equipment data models and display models. When adding equipment later , related data, interfaces, and analysis functions can be automatically generated and loaded.

Component Visualization

Provide a visual component library enabling users to assemble lightweight applications through drag-and-drop configuration. Achieve simultaneous web and mobile app publishing without coding to meet monitoring requirements, with automated deployment management.

Intelligent AI Analysis

The system can rapidly respond to faults, providing equipment operation data before and after the incident to help users analyze accident causes through 3D models.

Visual Modeling

Supports web-based online 3D modeling with real-time updates. 3D models can be viewed on both web and mobile app interfaces, displaying real-time data and status within the model.

Wind-solar-diesel-storage-charging solution

Wind-Solar-Wood Storage Integrated Unit



·Integrated design featuring ports for connecting various energy sources including wind power, photovoltaic systems, energy storage, and
generators, enabling flexible configuration based on requirements.
· Adopting high-power-quality grid-forming converters ensures efficient and stable system operation;
·Built-in EMS management system enables coordinated management of wind, solar, storage, diesel generators, and loads, making system
operation smarter and maintenance more convenient;
· Multi-layered protection design ensures system security and stability;
· Features various structural configurations including cabinet-type and prefabricated cabinet-type designs to accommodate diverse application scenarios.

Comprehensive New Energy Power Quality Controller

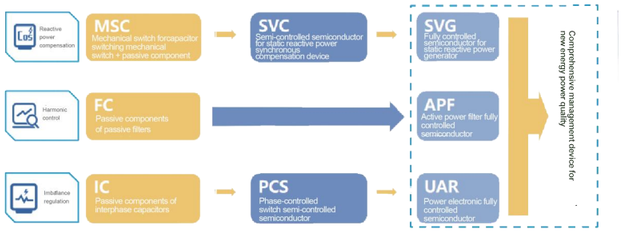



Smart Energy Management Platform

· Smart energy management platform built on the “source-grid-load-storage” model.
· Comprehensive energy monitoring: Real-time collection of operational data from multiple devices including wind, solar, diesel generators, storage systems, charging equipment, and loads to promptly detect anomalies.
· Integrated energy management: Effective tracking of overall energy balance, with refined and data-driven energy operation and equipment management.
· Energy Optimization: AI-powered energy production and consumption forecasting, operational optimization, multi-energy integration, and economic scheduling.
· Streamlined Operations: The management system enables remote monitoring and control of equipment operations, supporting desktop/mobile access to real-time device status for efficient maintenance.



Foldable Photovoltaic Power Module

· Portable and Compact Transport
· Rapid deployment and dismantling
· Environmental Protection
· Scalability and Modularity
· Wide range of applications



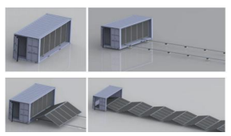



Working Principle

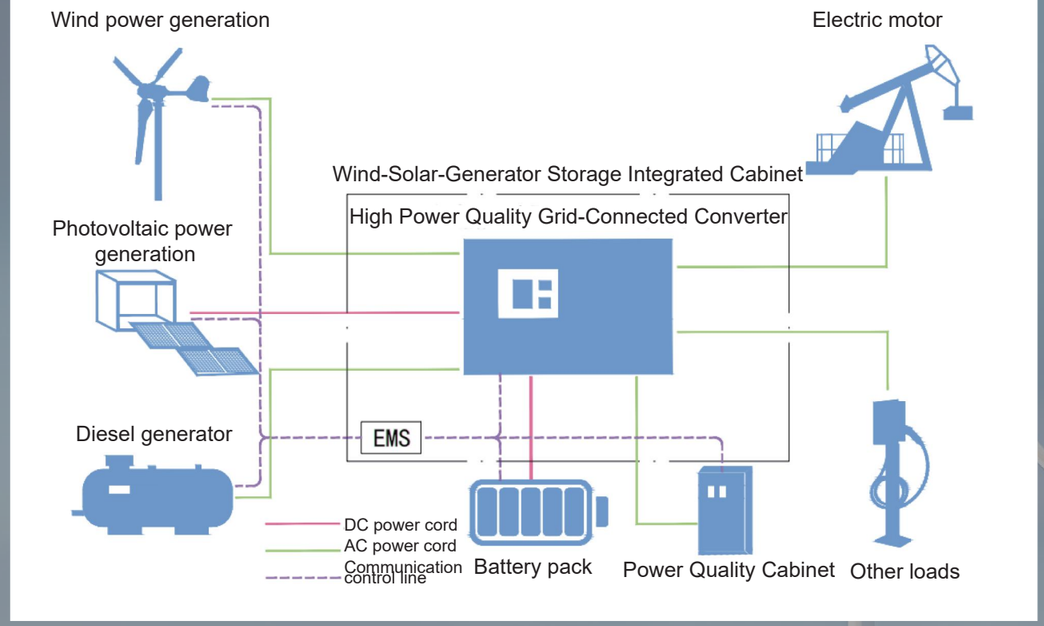

Technical Pathway

Response technology: High power quality grid-forming technology package

Key technologies such as fault ride-through, reactive power support and cooperative control, system restoring force stability, and high-order/ultra-high-order harmonic emission and suppression ensure the stability of system operation.

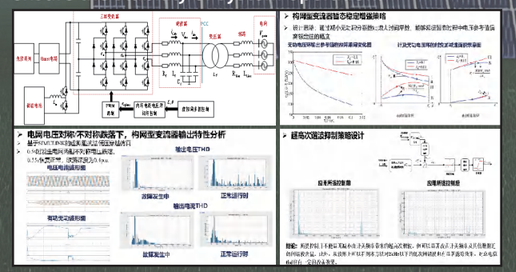

Dealing technology: HEOA Mathematical Programming algorithm

The optimal solution of system configuration from "source follows load" to "source and load interaction" provides decision-makers with more scientific and accurate decision support and conducts risk assessment.

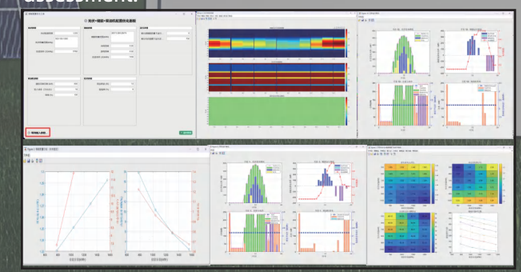

System of Harmony Intelligent & new energy distributed system

Based on the application requirements of distributed new energy, an integrated system analysis and planning of generation, grid, load, and storage has been conducted, identifying common characteristics of typical microgrids such as photovoltaic storage and charging/discharging systems.

Perform modeling and analysis using linear programming, integer programming, multivariable programming, and quadratic programming based on a large-scale model for new power systems. Achieve optimal system configuration, provide cost-effective power generation investment plans that meet generation capacity adequacy requirements, and address the need for efficient coordination among generation, grid, load, and storage.

Based on flexible multi-terminal power generation interconnection and cluster control technologies for new power systems, combined with transient power quality comprehensive algorithms, this approach achieves: - Optimized inter-cluster power flow control - Multi-coordinated operation of multiple feed-in/feed-back transmission reception terminals - Multi-level power quality identification and enhancement control It addresses challenges such as temporal-spatial mismatches between generation and load demand response, difficulties in power absorption, and deteriorating power quality.

Based on the “source-grid-load-storage” model, a smart energy management platform is constructed to achieve energy monitoring, management, and optimization.

HEOA Mathematical Programming Algorithm

Professional Energy Management System Platform

Comprehensive New Energy Power Quality Controller

Expert-Level Smart New Energy Utilization One-Stop Service Process

- For various distributed new energy utilization scenarios: photovoltaic storage and charging, hydrogen production, green parks, zero-carbon factories, energy consumption reduction and carbon emission reduction, power expansion, and power support...
- Flexible allocation and organic integration of various energy sources such as solar, wind and storage
- Professional power monitoring and artificial intelligence integrated intelligent system work in synergy
- Standardized products from leading suppliers + self-owned core power conversion and control technologies and products
- Professional technical economic accounting and analysis
- **Modularization, prefabrication and standardization ensure rapid delivery**

Competitive Advantage

- For various distributed new energy utilization scenarios
- Flexible allocation and organic integration of multiple energy sources
- The artificial intelligence integrated intelligent system works in an integrated and coordinated manner
- Standardized products from leading suppliers
- Modularization, prefabrication and standardization

Typical Topology Diagram

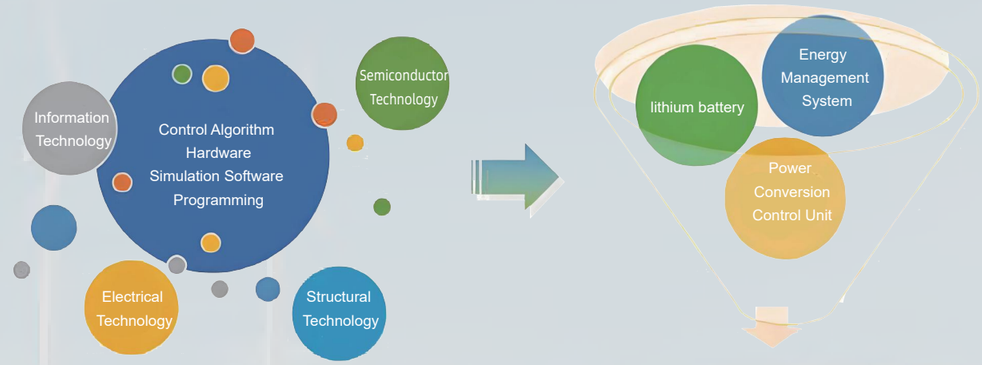

Interdisciplinary Integration

“Harmony”System

Application Scenarios



Comprehensive energy saving & consumption reduction & carbon reduction

Sanhe Power Tech enhances power quality to reduce losses by facilitating new energy and energy storage integration. It lowers customer electricity costs through energy conservation using high-efficiency motors and energy management systems. Leveraging years of continuous technological accumulation and innovation, the company delivers professional solutions for energy saving, consumption reduction, and carbon reduction alongside comprehensive smart energy services. Sanhe Power Tech strives to support enterprises in achieving energy conservation, consumption reduction, effective energy management, and the “dual carbon goals.”

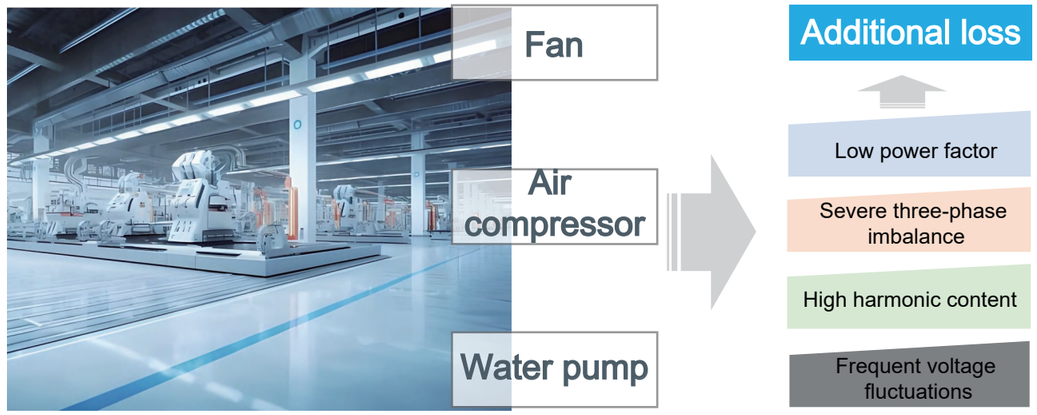



High/Low Voltage Static Var Power Generators



Active Filter Device



Three-Phase Unbalance Compensation Device



Dynamic Voltage Recovery Device

Features of the Solution

- SPMS and Cloud Platform
- Energy Storage
- Multifunctional Power Conversion Control Equipment
- Modular
- Integrated Turnkey Delivery

Implementation Path



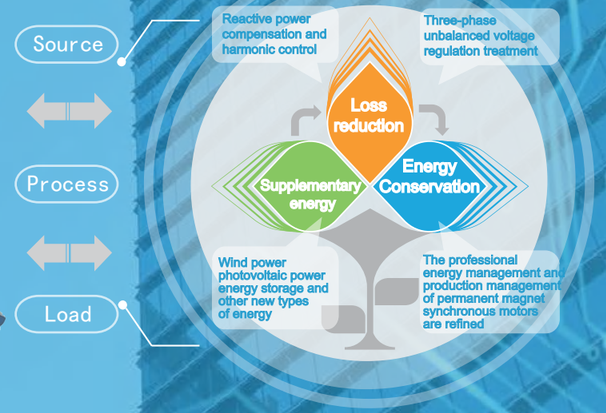

Application Scenarios









Green electricity hydrogen production solution

Green electricity hydrogen production solutions enhance the adaptive capability and disturbance resistance of flexible hydrogen production systems under fluctuating new energy input power scenarios. This is achieved through pressure differential regulation via feedforward control and multi-stage pressure regulation during rapid system changes in current, pressure, liquid level, and additional disturbances.

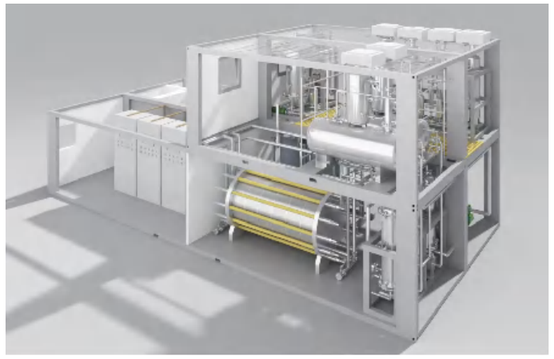

Exceptional resistance to fluctuations

Breakthrough direct seawater electrolysis capability

The Economic Efficiency of Green Hydrogen Production

Related Products



Hydrogen Production DC Power Supply Cabinet



Comprehensive Power Quality Management Device for New Energy

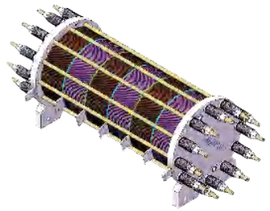

Multi-stage Direct Electrolysis Cell for Seawater

Competitive Advantage

Smart and Efficient

Wisdom

Safe and reliable

Energy Conservation

Modular

Solution Description

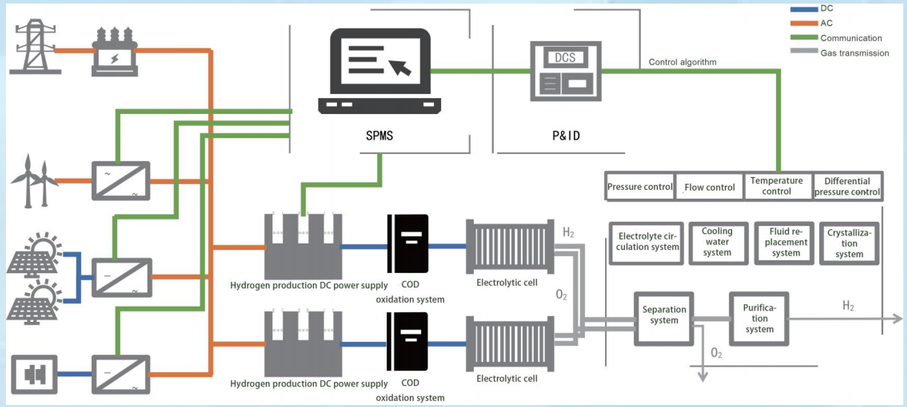

Technological Development



New Energy Multi-Energy Integration



Integrated Hydrogen Power Supply

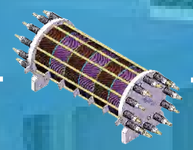

Multi-stage Direct Electrolysis Cell for Seawater



Applications in energy, industrial, transportation, and other sectors

SPW060C Series

Hydrogen production DC power supply complete set equipment

This product is a power supply unit specifically designed to deliver high-efficiency, stable, safe, and low-harmonic direct current at high currents for large-capacity hydrogen electrolysis cells. Its modular design allows for cabinet-level parallel operation to meet diverse application requirements. Output voltage, current, and power can be independently adjusted on-site, with stepless settings from zero to full scale to satisfy the demands of electrolysis cells.



Product Features

- Simple and cost-effective
- Easy to maintain
- Safe and reliable
- Smart and Efficient

Typical Topology Diagram

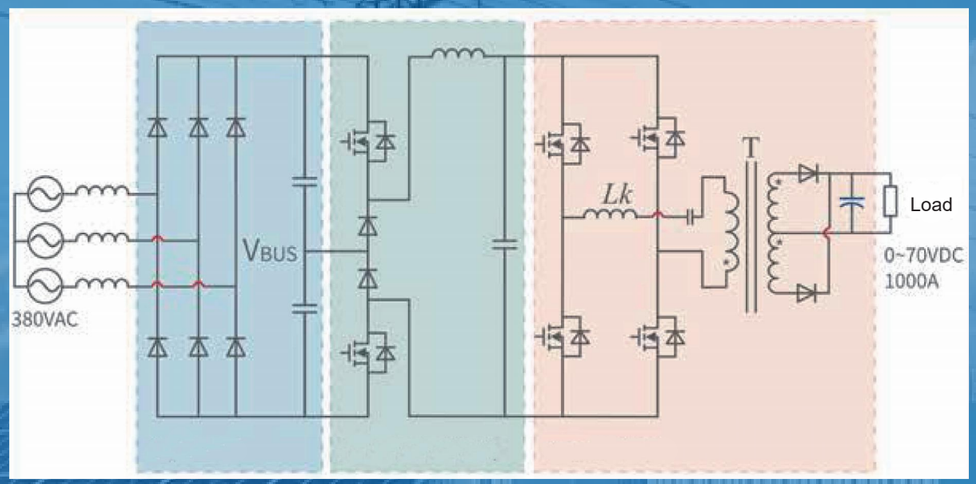

Key Technical Specifications

	Hydrogen production DC power cabinet unit	High-efficiency integrated hydrogen production DC power supply machine
Input section		
Rated input voltage	AC380V(-15%-+20%)	AC10kV(-20%-+20%)
Rated input frequency	50Hz/60Hz	50Hz/60Hz
Input power factor	>0.90(under the rated operating conditions of the module)	>0.95(including rectifier transformer)
Efficiency	Rated ≥94%	Rated ≥97%(including transformer)

	Hydrogen production DC power cabinet unit	High-efficiency integrated hydrogen production DC power supply machine
Output section (with isolation)		
Rated output current	DC 0-4500A(Continuously adjustable)	DC 15000A(Continuously adjustable)
Rated output voltage	DC 0-60V(Continuously adjustable)	DC 0-450V(Continuously adjustable)
Control mode	Constant current/constant voltage/constant power control	Constant current/constant voltage/constant power control
Control accuracy	<± 0.5%	<± 0.5%
Overload capacity	110% 1min	110% 1min
Device structure	Integrated cabinet type	Integrated cabinet type
Cooling method	Water cooling	Forced air cooling
Protection grade	IP40	IP40

Zero-carbon park microgrid solution

Guided by the dual carbon goals, Sanhe Power Tech leverages its years of technical expertise and innovation in power electronics and new energy to officially launch a new generation of comprehensive zero-carbon campus solutions. Centered on smart energy, this solution builds an integrated “generation-grid-load-storage” collaborative system. Through efficient utilization of clean energy sources like solar and wind power, optimized dispatch of smart microgrids, flexible configuration of energy storage systems, and precise control via a smart energy management platform, it achieves clean energy substitution, efficient conversion, and low-carbon operation for industrial parks. Covering the entire lifecycle from energy planning and system integration to operational management, the solution is dedicated to helping industrial parks reduce carbon emissions, enhance energy efficiency, and achieve a win-win outcome of economic and ecological benefits. It provides replicable and scalable pathways for zero-carbon transformation across diverse industrial park types.

Wind Power + Solar Power Green Energy at the Source

Micro-network Construction

Vehicle-to-Network Interaction

Green Power Direct Connection

Distributed Energy

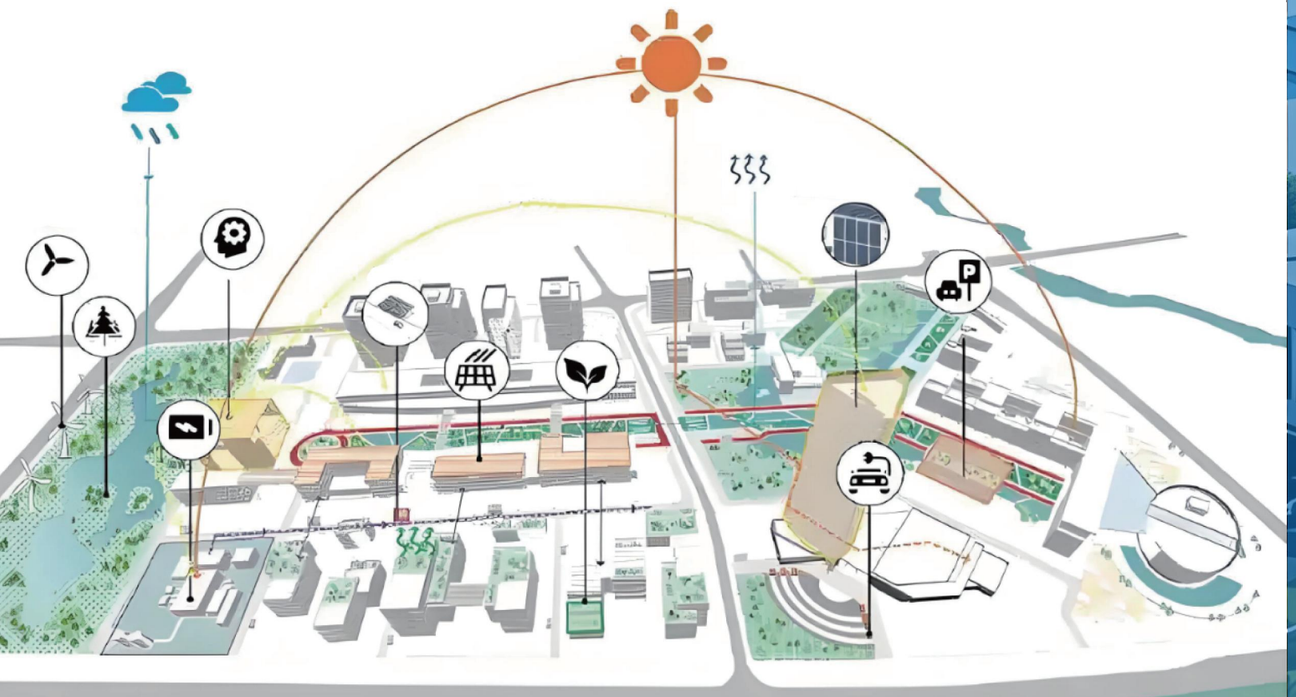

Features of the Solution

- Cloud Platform
- Energy Storage
- Integrated collaborative system
- Modularization
- Energy conservation and consumption reduction

Plan Details

The one-way process of "generation - transmission - transformation - distribution - consumption" in the traditional power system → The integrated cycle process of "source-grid-load-storage"

Source	Grid	Load	Storage
Green Source: Wind/Solar/Biomass/Water 1-hydrogen... Recycling: Reuse, degradation and regeneration Environmental protection: Green transportation, hiking /EV	High-efficiency scheduling High-efficiency transmission Concentration + distribution, time + space	Improvement of load efficiency High load efficiency and energy saving Load time/space optimization	Energy storage is an important carrier VPP around storage EV access, V2X Integrated wind, solar, diesel, storage and charging

01 Carbon inventory

Verification of carbon emissions within the park generates carbon footprints, carbon profiles, and carbon economy maps.

02 Carbon Planning

Carbon Reduction Plan for the Park
Digital Twin Technology
Carbon Planning Map

03 Carbon Construction

Green Energy Development within the Park
Unified Operation and Management of Green Energy

04 Carbon Optimization

Smart Operations, Energy Conservation and Carbon Reduction Real-time Monitoring, Strategy Optimization Carbon Planning Carbon Planning

05 Carbon trading

Systematically manage carbon assets within the park, including carbon emission rights trading and real-time dynamic monitoring.

Power quality

Sanhe Power Tech is a specialized company focused on power quality products, dedicated to providing customers with efficient and reliable power solutions. The company's main products include a series of advanced power equipment, covering various types such as capacitors and power electronic reactive power compensation devices, passive and active harmonic mitigation devices, power electronic three-phase imbalance mitigation devices, and power electronic dynamic voltage restoration devices.

Passive and Active Harmonic Mitigation Devices

Capacitors and Power Electronics Reactive Power Compensation Devices

Three-Phase Unbalance Mitigation Device for Power Electronics

Power Electronics Dynamic Voltage Recovery Device



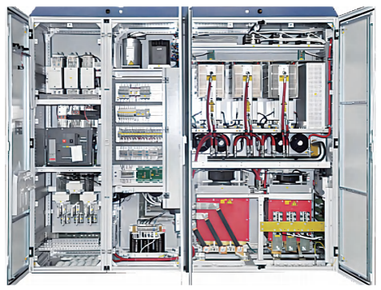





Application Scenarios



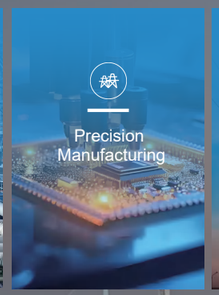



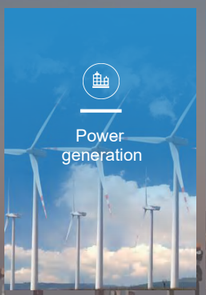

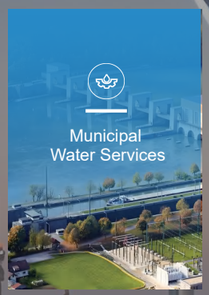

Advanced Technology

Reactive power flow simulation of power grid systems

Analysis of Amplitude-Frequency Characteristics of L-C circuits

Device integration and relay protection coordination

The reaction force characteristic curve of permanent magnet switches

Sampling and filtering of electronic circuits

Power device drive and protection

Pulse width modulation

Semiconductor forced commutation

Thermal simulation and heat dissipation design

Feedforward second-order complex vector algorithm

3D and information simulation

Internet of Things Communication

Virtual power plant dispatching

Microgrid and isolated network digital twin

HVCS Series

High Voltage Reactive Power Centralized Compensation Device

The HVCS series high-voltage reactive power centralized compensation devices are typically installed on the 3–35kV busbars of enterprise or local main step-down substations. They serve to enhance the power factor of the entire substation, achieving a fundamental balance of reactive power within the substation's supply area.

The HVCS series high-voltage centralized reactive power compensation devices are widely applied in AC power systems across industries such as metallurgy, mining, building materials, petrochemicals, and water supply/ drainage. They compensate for system reactive power, improve power factor, conserve energy, stabilize grid voltage, and reduce line losses.



Product Features

- Excellent configuration: High-voltage power capacitors with advanced technology and full-film dielectric feature high initial discharge voltage, good sealing performance, high reliability, long service life, low loss, low operating temperature rise, and low failure rate. It can reduce the residual voltage of the capacitor to below 75V within 10 minutes after it is disconnected from the power grid. The external discharge coil can be reduced to below 50V within 5 seconds.
- Comprehensive protection: High-voltage spray-type fuses or current-limiting fuses are adopted as internal fault or short-circuit protection for individual capacitors, or internal fuse capacitors are directly used to ensure the safe operation of the equipment.
- Operation safety: Equipped with high-voltage live display devices, electromagnetic locks and observation Windows, it has a forced locking function to ensure the personal safety of maintenance personnel.
- Customized service: The structure design is reasonable and convenient to use. Generally, the following two structural schemes can be adopted: one is cabinet structure, and the other is frame structure. Other special types can be customized according to the user's requirements.
- Longer service life: According to the actual working conditions of the user, dry-type series core or air-core reactors with appropriate reactance rates are configured to suppress high-order harmonics or limit inrush current during closing, effectively extending the service life of the device.
- Real-time monitoring: It is equipped with the self-developed SWCP intelligent reactive power compensation monitoring device as standard to achieve capacitor imbalance and other protections, and can be configured with the SPQ power quality online monitoring device to provide real-time operating parameters of the capacitor
- The protection methods are flexible and diverse: The line scheme generally adopts single-star or double-star connection methods. The main protection methods include open delta voltage, differential voltage, and neutral point unbalanced current, among others. Among them, open delta voltage protection is not affected by system voltage imbalance and the third harmonic, and has high sensitivity. It is a commonly used protection method for medium and small capacity capacitor banks (20Mvar and below). Differential voltage protection is not affected by system ground faults or system voltage imbalance. It operates relatively sensitively, and the phase of the fault can be determined based on the action indication. It is mainly used in 35kV systems with a capacity not exceeding 20Mvar. The double-star neutral point unbalanced current protection is not affected by external factors and has high protection sensitivity when the capacitance of the three-phase two-arm is balanced. It is generally applied to capacitor banks with voltage levels of 10kv and 35kV and below 20Mvar

Model Description

HVCS – □–□ / □–□ □ □

- Installation location: Not specified: Indoor; W: outdoor
- Protection methods: K: Open delta voltage L: Unbalanced current C: Differential voltage
- The main wiring methods of the device are: A: single star type B: Double star type
- Capacity of a single capacitor :kvar or composition
- Rated capacity of the device :kvar
- Rated voltage of the device :kV
- High-voltage reactive power centralized compensation device

Terms of Use

Ambient temperature	-25°C to +45°C(Customizable for special ambient temperatures)
Relative humidity	No more than 95%
Altitude	Not exceeding 1000m(customizable for high altitudes)
Maximum operating voltage	Not exceeding 110% of the rated voltage (except during the transition process)
Maximum load current	Not exceeding 130% of the rated current (except during the transition process)
Surrounding medium	There is no explosion or flammability hazard, no gas that can damage insulation or corrode metals, and no conductive dust
Installation location	No severe vibration or jolting, and the installation inclination should not exceed 5%
Power supply	It complies with national standards and does not have strong harmonic components

Implementation and Reference Standards

IEC 60871-1：2014	(Shunt capacitors for a.c. powersystems having a rated voltage above 1000V-Part 1: General)
GB/T 11024.1-2019	Parallel Capacitors for AC Power Systems with Rated Voltage Above 1000V - Part 1: General Requirements
GB 50227-2017	Design Specification for Parallel Capacitor Banks
GB/T 30841-2014	General Technical Requirements for High-Voltage Parallel Capacitor Banks
DL/T 604-2020	Technical Conditions for Use of High-Voltage Parallel Capacitor Banks
Q/RCSW 001-2016	HVC Series High-Voltage Reactive Power Compensation Devices

Structural Design

- The product structure is flexible. According to the site conditions and user requirements, cabinet or frame structures can be selected, and appropriate components can be configured to meet the on-site working conditions.
- The cabinet structure adopts hard steel frame profiles as the framework. The panels and side panels are made of high-quality cold-rolled steel plates and undergo surface plastic spraying treatment to prevent corrosion. The structural design of the device adopts the isolation of the high-voltage part (primary) and the low-voltage part (secondary) from each other, creating a high-voltage chamber and a low-voltage chamber. It can prevent the arc and the airflow carrying metal particles generated in case of a fault in the high-voltage part from spreading to the low-voltage system, causing damage to relay, protection and other devices, and thus endangering personal safety. Moreover, when performing meter calibration, component replacement and other tasks in the low-voltage system, it does not affect the operation of the high-voltage system, reducing the number of high-voltage operations and ensuring the safe operation of the equipment.
- The cabinet structure is equipped with high-voltage incoming call display, and is set with threshold switches and electromag-netic locks to achieve forced locking. It has the "five-prevention" function of high-voltage switch cabinets to ensure the personal safety of maintenance personnel and the safety of equipment.
- According to the actual situation of the user's site, the complete set of equipment can be placed in a dry cabinet, ensuring sufficient electrical safety distance between each component. It can also be divided into an incoming line cabinet, a capacitor cabinet and a reactor cabinet to achieve mutual isolation of different components.
- In a frame structure, lightning arresters, discharge coils, blowout fuses and capacitors are generally installed on the frame (or placed on a cement or insulating platform as per the actual situation), and reactors are installed on the cement platform. If a disconnector is configured It is generally installed on the fence door. The entire set of equipment is isolated by a fence and is equipped with a live interlock device to prevent personnel from entering the live compartment by mistake. The secondary line is installed through a dedicated terminal box.
- Cabinet structure is suitable for small-capacity capacitor banks. Meanwhile, to reduce the cabinet size and meet the net magnetic distance requirements, dry-type core reactors are generally selected. The frame structure is generally suitable for large-capacity or high-voltage (35kV and above) capacitor banks, and dry-type air-core reactors are more commonly used.

Electrical Schematic Diagram

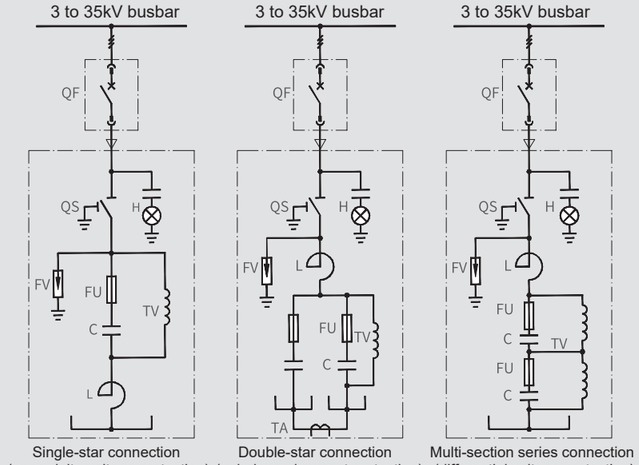

Single-star connection (open-delta voltage protection) | Double-star connection (unbalanced current protection) | Multi-section series connection (differential voltage protection)

Product Dimensions

■ Cabinet Structure Dimensions and Capacity Configuration Table

No.	Cabinet Dimensions (W*D*Hmm)	Number of Cabinets (Units)	Maximum Capacity (Kvar)
1	1000×1500×2600	1	500
2	1200×1600×2600	1	1500
3	1600×1600×2600	1	2400
4	2400×1600×2600	1	3000

■ Frame Structure Dimensions and Capacity Configuration Table

No.	Cabinet Dimensions (W*D*Hmm)	Number of Cabinets (Units)	Maximum Capacity (Kvar)
1	3000×5600×1800	1	3000
2	5000×3600×1800	1	6000
3	9000×10000×1800	1	60000

Note: Special cabinet types or dimensions can be customized per user requirements. Adding large components such as disconnect switches or vacuum contactors will increase cabinet dimensions. When using internal fuse capacitors or top-entry wiring, the maximum capacity per unit may be appropriately increased.

■ Dimension Drawing

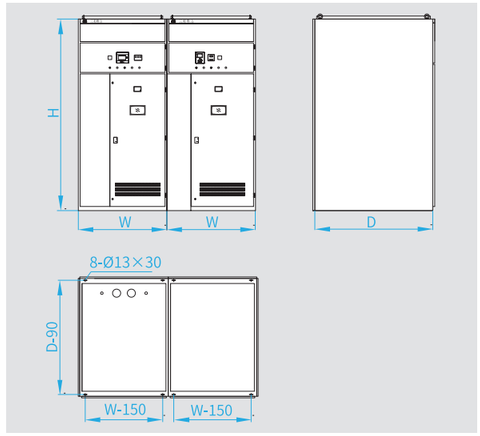

Cabinet Structure Diagram

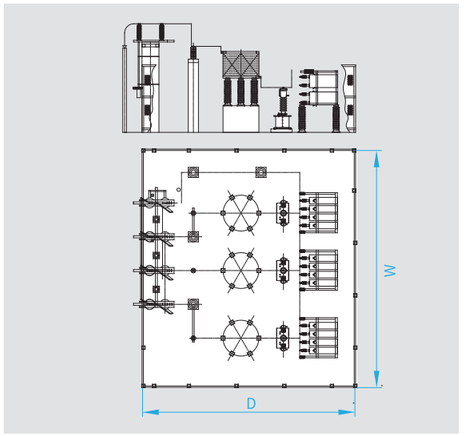

Framework Structural Diagram

Selection Guide

- The order model should specify the device's rated voltage, rated capacity, and individual capacitor capacity; any other special requirements must be noted.
- HVCS series centralized compensation devices typically feature a cabinet structure for easy installation in the capacitor room of distribution substations; a frame structure can also be provided upon customer request.
- Device capacity selection should account for system load fluctuations to prevent overcompensation or undercompensation.If the rated voltage of the device capacitors is significantly higher than the busbar voltage, or if series reactors are
- configured, the output capacity and installation capacity must be verified through calculation.
- Device configuration and structural dimensions can be customized accCabinet Structure Diagramording to user requirements through mutual
agreement.

Selection Example:
For a system with a rated voltage of 10kV requiring 2110kvar of compensation capacity, and specifying a 6% reactor to suppress 5th-order and higher harmonics while limiting inrush current during closing, the recommended solution is the HVCS-10-2400/400 reactive power centralized compensation unit. Its rated capacity is 2400kvar, with a single capacitor unit capacity of 400 kvar and internal fuse protection. At a bus voltage of 10kV, the device delivers an output capacity of 2110 kvar. It consists of a single cabinet with overall dimensions of 1600x1600x2600mm.

HVCA Series

High Voltage Reactive Power Automatic Compensation Device

The HVCA series high-voltage automatic reactive power compensation device employs a power factor controller to automatically monitor active and reactive power in real time. It compares these readings against preset parameters to determine the optimal control strategy, then operates mechanical switches to group-switch capacitors on or off. This addresses the limitation of parallel capacitors, which can only provide fixed output capacity and cannot dynamically track fluctuating loads for compensation.

The HVCA series high-voltage automatic reactive power compensation devices are primarily deployed in substations or distribution rooms of large and medium-sized enterprises within industries such as metallurgy, mining, building materials, petrochemicals, and water supply/drainage, where load fluctuations are significant. They enable parallel capacitors to achieve optimal compensation effects while preventing overcompensation or undercompensation, ensuring the system's required reactive power remains balanced.



Product Features

- Excellent switching effect: It adopts a self-developed power factor controller with advanced algorithm and dynamic following, achieving the best switching effect with the fewest switching times and preventing switching oscillation.
- Intelligent grouping: The grouping capacity ratio of capacitors can be: equal capacity grouping; Press 1:2:2... Or multiple coding schemes such as 1:2:4:8, and any grouping method can also be adopted according to the actual working conditions of the user to meet the needs of various situations.
- Long service life: The switching switch of the capacitor adopts vacuum contactors suitable for opening and closing capacitive current, which are compact in size and have extremely high electrical and mechanical service life. Vacuum switches with the ability to open and close capacitive current can also be used.
- Comprehensive protection: The device is fully protected. Besides the blowout fuse and relay protection, it also features operation overvoltage protection, inrush current limitation during closing, and capacitor discharge protection.
- The "Three remote" function: The complete set of equipment can, as per the user's requirements, transmit various parameters to the upper computer through the communication interface (485 interface) to achieve "three remote".
- Safe operation and convenient maintenance: The entire set of equipment adopts a cabinet structure and is equipped with observation Windows and safety measures to ensure the safety of the operating personnel. Each compensation branch circuit is composed of one or several relatively independent cabinets to achieve mutual isolation of the compensation branch circuits, facilitating operation, inspection and maintenance. Note: To save space, the incoming line and control system are generally integrated in the first compensation cabinet. Alternatively, a separate incoming line or control cabinet can be set up

Model Description

HVCA – □ – □ / □

- Grouping Method
- Rated Capacity of Device: kvar
- Rated Voltage of Device: kV
- High-Voltage Automatic Reactive Power Compensation Device

Conditions of use

Ambient temperature	-25°C to +45°C(Customizable for special ambient temperatures)
Relative humidity	No more than 95%
Altitude	Not exceeding 1000m(customizable for high altitudes)
Maximum operating voltage	Not exceeding 110% of the rated voltage (except during the transition process)
Maximum load current	Not exceeding 130% of the rated current (except during the transition process)
Surrounding medium	There is no explosion or flammability hazard, no gas that can damage insulation or corrode metals, and no conductive dust
Installation location	No severe vibration or jolting, and the installation inclination should not exceed 5%
Power supply	It complies with national standards and does not have strong harmonic components

Product Dimensions

IEC 60871-1：2014	Shunt capacitors for a.c. power systems having a rated voltage above 1000V- Part 1: General
GB/T 11024.1-2019	Parallel Capacitors for AC Power Systems with Rated Voltage Above 1000V - Part 1: General Requirements
GB 50227-2017	Design Specification for Parallel Capacitor Banks
GB/T 30841-2014	General Technical Requirements for High-Voltage Parallel Capacitor Banks
DL/T 604-2020	Technical Specifications for Ordering High-Voltage Shunt Capacitor Units
Q/RCSW 002-2016	HVCA Series High-Voltage Automatic Reactive Power Compensation Device

Primary electrical schematic diagram

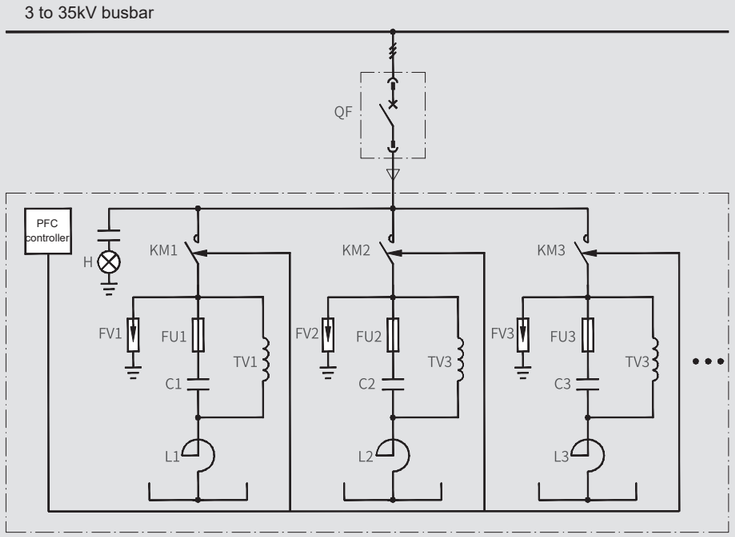

Typical HVCA Wiring Diagram

Product Dimensions

■ Cabinet Structure Dimensions and Capacity Configuration Table

No.	Cabinet Dimensions (W*D*Hmm)	Number of Cabinets (Units)	Maximum Capacity (Kvar)
1	1000×1500×2600	1	300
2	1000×1600×2600	1	600
3	1200×1600×2600	1	1500
4	1600×1600×2600	1	2000

Note: The overall height and depth of the complete switchgear assembly are determined by the cabinet with the largest capacity.Special cabinet types or dimensions can be customized according to user requirements.
If additional components such as grounding switches or current-limiting fuses are added, the cabinet dimensions will increase accordingly.
If internal fuse capacitors or top-entry wiring are used, the maximum capacity per unit can be appropriately increased.

■ Dimension Drawing

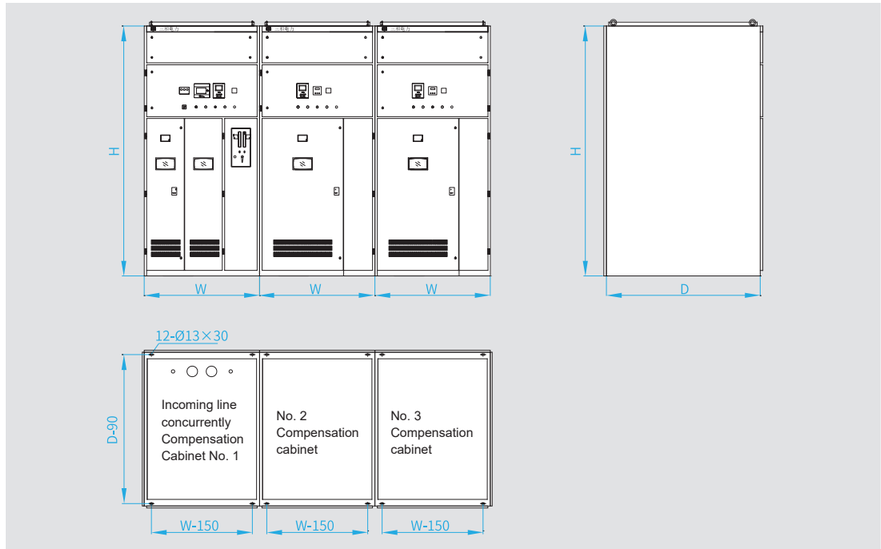

Selection Guide

- The order model should specify the device's rated voltage, installed capacity, and grouping method; other special requirements must be noted.
- The HVCA series automatic compensation device adopts a cabinet design, allowing convenient mounting within the capacitor room of a distribution substation.
- Device capacity selection should consider reactance ratio, capacity combination, and system short-circuit capacity relationships to prevent system resonance.
- If the rated voltage of the device capacitors is significantly higher than the busbar voltage, or if series reactors are configured, output capacity and installation capacity must be verified.
- Device configuration and structural dimensions can be customized according to user requirements through consultation.

Selection Example:
For a system with a rated voltage of 6kV requiring an automatic compensation device with an installed capacity of 1800kvar, and specifying a 6% reactor to suppress 5th-order and higher harmonics while limiting inrush current during closing, the recommended model is the HVCA-6-1800/300+600+900 reactive power automatic compensation device. Divided into three groups at a 1:2:3 ratio, it enables six-level compensation. The system comprises three cabinets with overall dimensions of 3400x1600x2600mm.

HVC Series

Series High Voltage Reactive Power Local Compensation Device

The HVC series high-voltage reactive power local compensation device primarily utilizes shunt capacitors, equipped with protective and other components for reactive power compensation. It is typically connected in parallel to three-phase AC distribution systems operating at 50 or 60 Hz with a nominal voltage of 3 to 10 kV. Installed near asynchronous motors or inductive electrical equipment, it provides local compensation.

The HVC series high-voltage reactive power local compensation devices are widely applied in high-power, high-voltage motor equipment across industries such as metallurgy, mining, building materials, petrochemicals, and water supply/drainage.Particularly when compensating long-distance lines, they significantly reduce losses, improve the power factor of the power system, conserve energy, stabilize voltage, and enhance power supply quality.



Product Features

- Three-phase or single-phase high-voltage shunt capacitors, manufactured with advanced technology and all-film dielectric, feature environmentally friendly, highly stable and non-toxic impregnating agents as insulating media. They are characterized by high reliability, low loss, small size, long service life, low operating temperature rise and low failure rate.
- High-voltage spray-type fuses or current-limiting fuses are adopted as fault or short-circuit protection for individual capacitors to ensure the safe operation of the equipment.
- The capacitor has excellent sealing performance and is equipped with an internal discharge element, which can reduce the residual voltage of the capacitor to below 75V within 10 minutes after it is disconnected from the power grid
- The external discharge coil can be reduced to below 50V within 5 seconds.
- The device is equipped with a high-voltage live display, electromagnetic lock and observation window, and has a forced locking function to ensure the personal safety of maintenance personnel.
- The structure design is reasonable and convenient to use. It can be switched on and off simultaneously with the load and has good thermal dynamic stability.
- The self-developed SWCP series intelligent reactive power compensation monitoring device is adopted as the relay protection.

Model Description

HVC □ – □ – □ □

- Optional component codes :A: Lightning arrester, P: Voltage transformer or discharge coil, T: Communication interface
- Rated capacity of the device :kvar
- Rated voltage of the device :kV
- Marked with reactor :R; not marked without reactor
- High-voltage reactive power local compensation device

Terms of Use

Ambient temperature	-25°C to +45°C(Customizable for special ambient temperatures)
Relative humidity	No more than 95%
Altitude	Not exceeding 1000m(customizable for high altitudes)
Maximum operating voltage	Not exceeding 110% of the rated voltage (except during the transition process)
Maximum load current	Not exceeding 130% of the rated current (except during the transition process)
Surrounding medium	There is no explosion or flammability hazard, no gas that can damage insulation or corrode metals, and no conductive dust
Installation location	No severe vibration or jolting, and the installation inclination should not exceed 5%

Implementation and Reference Standards

IEC 60871-1：2014	(Shunt capacitors for a.c. powersystems having a rated voltage above 1000V-Part 1: General)
GB/T 11024.1-2019	Parallel Capacitors for AC Power Systems with Rated Voltage Above 1000V - Part 1: General Requirements
GB 50227-2017	Design Specification for Parallel Capacitor Banks
GB/T 30841-2014	General Technical Requirements for High-Voltage Parallel Capacitor Banks
DL/T 604-2020	Technical Conditions for Use of High-Voltage Parallel Capacitor Banks
Q/RCSW 001-2016	HVC Series High-Voltage Reactive Power Compensation Devices

Determination of Reactive Power Compensation Capacity

No-Load Current Method

$Qc=\sqrt{3}\,Ue\times I_0\times K_1$

I_0 : No-Load Current A

K_1 : Compensation Factor (Recommended Value: 0.9)

Qc: Compensation Capacity kvar

Ue: Rated Line Voltage kV

Target Power Factor Method

$Qc=P\sqrt{(1/COS^2\,\Phi e-1)}-\sqrt{(1/COS^2\,\Phi-1)}=P(\tan\Phi e-\tan\Phi)$

P: Motor Input Power kW

COSΦe: Compensation Capacity kvar

tanΦe: Motor Rated Power Factor

tanΦ: Tangent of Motor Rated Power Factor Angle

Qc: Tangent of Target Power Factor Angle After Compensation

COSΦ : Target Power Factor After Compensation

Electrical Schematic Diagram

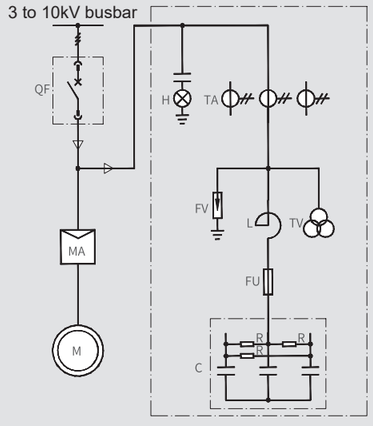

Typical Wiring Diagram for Three-Phase Capacitor HVCR

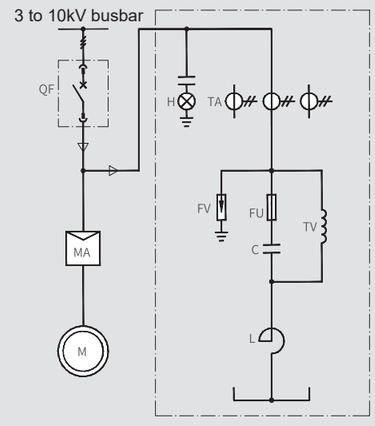

Typical Wiring Diagram for Single-Phase Capacitor HVCR

Product Dimensions

Dimensions of Three-Phase Capacitor HVCR (Reactance Rate 6%)

No.	Cabinet Dimensions(W*D*Hmm)	Number of Cabinets	Maximum Capacity(Kvar)
1	900×1200×2400	1	200
2	1000×1200×2400	1	300
3	1000×1400×2400	1	500

Single-phase capacitor HVCR dimensions (reactance rate 6%)

No.	Cabinet Dimensions(W*D*Hmm)	Number of Cabinets	Maximum Capacity(Kvar)
1	1000×1500×2400	1	300
2	1200×1500×2400	1	600
3	1200×1600×2400	1	1000

Note:
Special cabinet types can be customized according to user requirements.
If user site dimensions are constrained, alternative insulation measures may be adopted to reduce cabinet size.
For instance, incorporating large-sized components such as disconnect switches or vacuum contactors will increase cabinet dimensions.
When employing internal fuse capacitors or top-entry wiring, the maximum capacity per unit may be appropriately increased.

Dimension Drawing

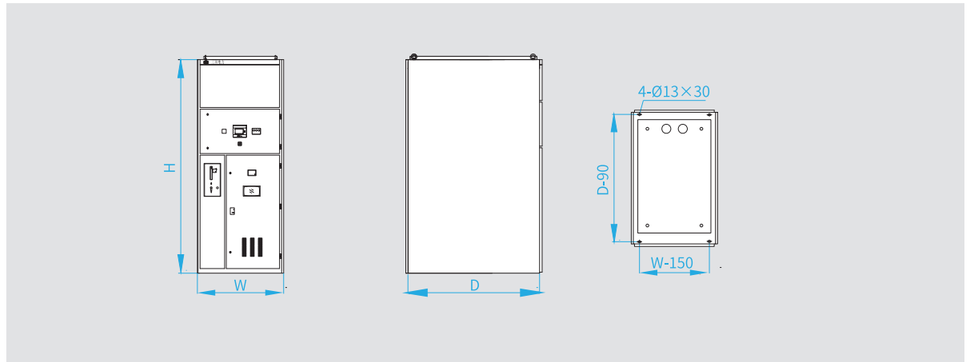

Selection Instructions

- The order model should specify the device's rated voltage, rated capacity, and whether series reactors are included ; other special requirements must be noted.
- HVC series local compensation devices typically feature a cabinet structure, allowing convenient installation in the capacitor room of a distribution substation or beside motors in workshops.
- Device capacity selection should account for the motor's no-load capacity to prevent self-excitation from damaging motor insulation.
- If the rated voltage of the device capacitors is significantly higher than the busbar voltage, or if series reactors are configured, the output capacity and installation capacity must be verified through calculation.
- Device configuration and structural dimensions can be customized according to user requirements through mutual agreement.

Selection Example:
For a system with a motor rated voltage of 10kV requiring 264kvar of compensation capacity, and specifying a 6% reactor to suppress 5th-order and higher harmonics while limiting inrush current during closing, the recommended solution is the HVCR-10-300 local reactive power compensation device. with an installed capacity of 300 kvar. At a bus voltage of 10kV, the device outputs 264 kvar. It consists of a single cabinet unit utilizing single-phase capacitors, with dimensions of 1000x1500x2400mm.

HVPF Series

High Voltage Passive Harmonic Filter

Due to the improvement of industrial automation levels, rectifier equipment, frequency converters, electrolytic cells and electric arc furnaces are widely adopted in industrial and mining enterprises. These nonlinear loads generate a large amount of high-order harmonics during operation, which are injected into the power grid, causing waveform distortion in the grid, deteriorating grid quality, and threatening the safe operation of other electrical equipment in the power supply system. This kind of "power pollution hazard" that pollutes the power grid can cause additional losses to transformers, cables and other power devices. It can also cause abnormal functions of control, protection and measurement systems, and interference to communication and networks.

The HVPF series of high-voltage passive Harmonic filter is the best solution to voltage and current distortion. This device mainly focuses on harmonic control and also serves reactive power compensation. It not only ensures that the harmonic voltage distortion rate of the system and the harmonic current flowing into the power grid meet the national standard requirements, but also improves the power factor, achieving the dual goals of control and energy conservation.



Product features

- Based on the system impedance, power and harmonic parameters, computer simulation software is used to simulate the design, determine the reasonable filter branch and installation capacity, and ensure the superiority and reliability of the scheme.
- The filter capacitor adopts all-film insulating dielectric, featuring small size, low loss, low operating temperature and strong overload capacity.
- The filter reactor adopts a single-phase air-core reactor, with a reactance value continuously adjustable within ± 5%, featuring low operating noise. The anode uses non-inductive or micro-inductive resistors, with a steply adjustable anode value to ensure the accuracy of the tuning point and the filtering effect.
- The complete set of equipment is equipped with a live display and an electromagnetic composition forced interlock link to ensure the safety of the operating personnel.
- For situations with high power factor and large harmonic current, a reactor connected in parallel with the filter capacitor can be added to form a high-order LC circuit, making the power frequency current approach zero while still presenting low impedance at high-order harmonic frequencies, thereby achieving the "zero reactive power" filtering function.
- The structural form of the complete set of equipment is flexible, including frame type and cabinet type, and can be designed according to the actual site of the user.

Model description

HVPF – □ – □ / □

- Filtering branch
- Rated capacity of the device :kvar
- Rated voltage of the device :kV
- High-voltage passive filter device

Main technical parameters

Rated voltage	3-35kV
Rated fundamental frequency	50Hz(60Hz)±5%
Wiring method	Y
Protection grade	Indoor cabinet-type IP2X, indoor and outdoor frame-type safety fences are configured
Protection method	Overvoltage, undervoltage, overcurrent, imbalance, fuse protection
Filter out harmonics	3 times, 5 times, 7 times, 11 times, 13 times (Qualcomm, etc.)

Conditions of use

Ambient temperature	-25°C to +45°C(Customizable for special ambient temperatures)
Relative humidity	No more than 95%
Altitude	Not exceeding 1000m(customizable for high altitudes)
Maximum operating voltage	Not exceeding 110% of the rated voltage (except during the transition process)
Maximum load current	Not exceeding 130% of the rated current (except during the transition process)
Surrounding medium	There is no explosion or flammability hazard, no gas that can damage insulation or corrode metals, and no conductive dust
Installation location	No severe vibration or jolting, and the installation inclination should not exceed 5%

Execution and reference standards

IEC 60871-1:2014	"Shunt capacitors for a.c. power systems having a ratedvoltage above 1000V- Part 1: General"
GB/T 26870-2011	Application of Filters and Shunt Capacitors in Industrial AC Power Grids Affected by Harmonics
GB/T 11024.1-2019	Shunt capacitors for AC power systems with Nominal Voltage above 1000V - Part 1: General Provisions
GB/T 14549-1993	"Power Quality - Harmonics in Public Power Grids"
JB/T 10931-2010	"High-voltage Power Filter Device"

Working principle

This device is a filter circuit composed of filter capacitors, filter reactors and non-inductive resistors, which is connected in parallel with the harmonic source. It provides a low-impedance channel outside the power grid for each harmonic respectively, allowing most of these harmonic currents to flow into the filter, thereby reducing the distortion of the power grid to a required level. For the fundamental frequency (50Hz), the filter acts like a capacitor, providing reactive power to the power grid to improve the power factor and achieve the best effect.

According to the on-site conditions, a filtering system can be composed of single tuning, double tuning and high-pass filters, etc., to filter out harmonics with high frequencies in the network (such as the 5th, 7th, 11th, etc.). This device is not only rationally designed and reliably operated, but also has a complete protection system, ensuring the stable operation of the complete set of equipment.

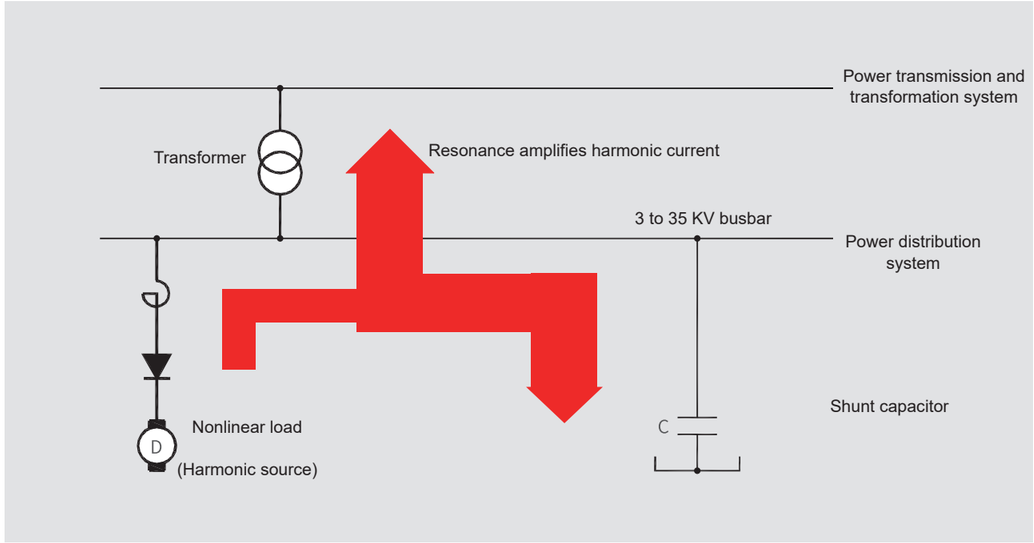

Figure 1 shows the harmonic flow direction after the capacitor and the power grid form a parallel resonant circuit

When the power factor of the system is low, capacitor banks need to be connected in parallel to compensate for reactive power. For instance, if the capacitor bank and the inductance of the system itself form a parallel resonant circuit at a certain harmonic frequency, it will cause amplification of harmonics, making the harmonic voltage exceed the allowable value of the application scenario and resulting in power grid pollution. As shown in Figure 1.

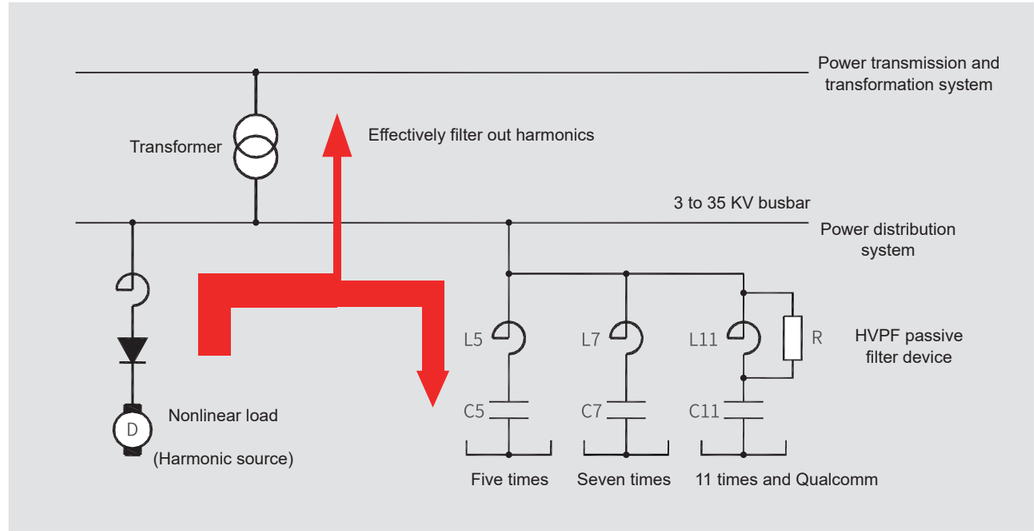

Figure 2 shows the harmonic flow direction after using the HVPF passive filter device

Filter compensation devices that are designed and produced in a targeted manner based on the on-site conditions of the customer. The input data during the design process is derived from on-site measurement values and then subjected to computer simulation models. Therefore, the filtering effect is very ideal. Most of the harmonics flow to the filter, while only a small portion (conforming to the standard) flows to the power grid. As shown in Figure 2.

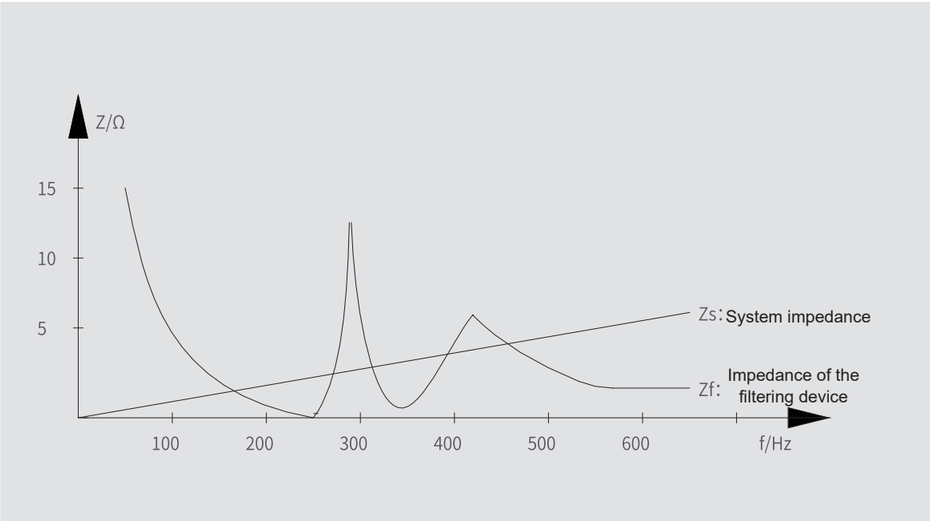

Figure 3 System frequency-resistance diagram

Figure 3 is an impedance diagram drawn based on the system diagram in Figure 2. It can be clearly seen from the figure that the impedances of the 5th harmonic, 7th harmonic, 11th harmonic and above are very low, so the filtering effect is good.

Main wiring diagram

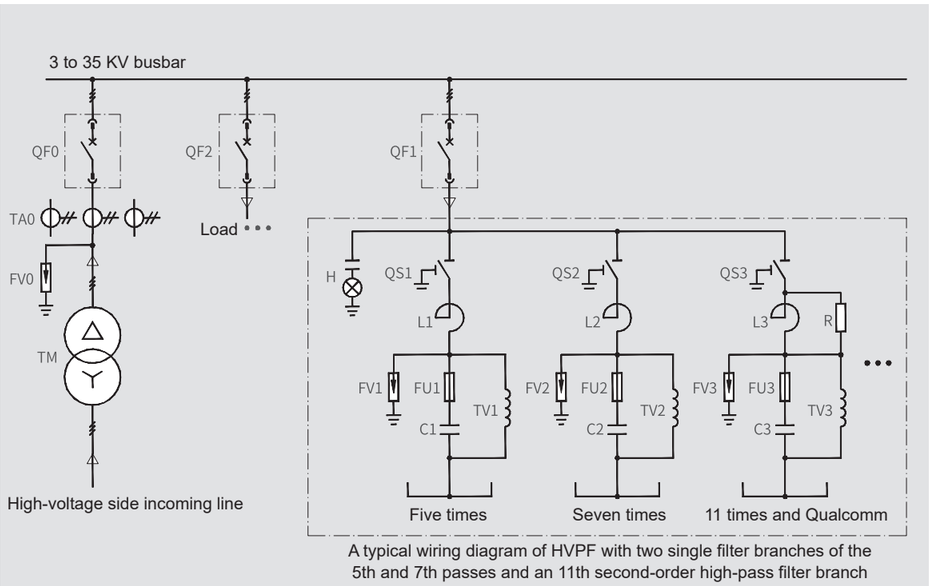

A typical wiring diagram of HVPF with two single filter branches of the 5th and 7th passes and an 11th second-order high-pass filter branch

Filtering compensation effect

- The harmonic filtering index complies with the national standard requirements GB/T14549-93 "Power Quality - Harmonics in Public Power Grids".
- Reactive power compensation can increase the power factor to above 0.95, saving electricity expenses.
- It has reduced the losses of transformers and lines, enhanced the load capacity of power transmission and transformation equipment, and prolonged the service life of electrical control equipment.

Technical service

- On-site detection and analysis of customer harmonics and provision of test reports
- Propose a solution based on the on-site situation of the customer
- The determination of the customer's harmonic control plan and the transformation of harmonics
- Reactive power testing, determination and modification of reactive power compensation schemes

Parameters required for placing an order

- The nameplate parameters of the power supply transformer, the minimum short-circuit capacity or short-circuit current at the installation point, etc
- The active power, reactive power, power factor and operating cycle of the system, etc., and provide the primary wiring diagram of the system
- The nature of the harmonic source and nameplate parameters (variable frequency, DC speed regulation, medium frequency furnace, rectification), the current harmonic situation, and harmonic test data
- Cabinet size requirements, environmental conditions of the installation site and protection level
- The required power factor, harmonic distortion rate and other requirements

HSVG Series

High Voltage Static Var Generator

The HSVG series high-voltage static reactive power generation device is the most ideal solution for reactive power compensation and harmonic suppression. It adopts instantaneous reactive power theory, PWM pulse width modulation technology, and multi-core parallel processing technology. It can steplessly adjust the output reactive power from capacitive to inductive throughout the full range, improving the stability of the power grid at the fastest speed, increasing transmission capacity, and eliminating reactive power impact Filter out harmonics and balance the three-phase power grid.

The HSVG series of high-voltage static reactive power generation devices are suitable for the new energy power generation field and industrial and commercial power supply and distribution networks with voltage levels of 35kV and below.

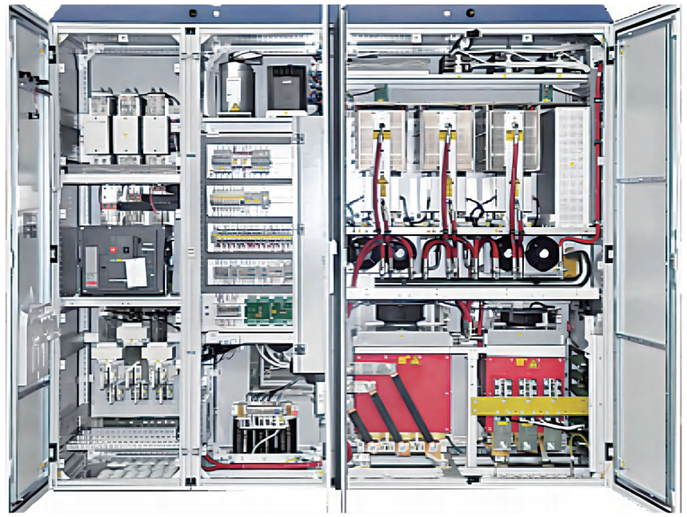

Product features

- The control methods are flexible and diverse: various control strategies such as constant reactive power, constant reactive power at the test point, constant voltage, and target power factor can be adopted. The capacity adjustment range is wide: The HSVG device can multi-level adjust the capacitive and inductive reactive power output.
- High power density: The impedance and volume of the connected reactor are smaller, and the volume of the power unit is also smaller.
- Easy maintenance :HSVG units can be interchanged, and modular HSVGS can be inspected and repaired independently without affecting each other.
- Perfect protection: The perfect self-protection system design monitors the working status of each component of HSVG and has bypass protection function.
- Less land occupation: The land occupation of HSVG with the same compensation accuracy and capacity does not exceed half of that of SVC.
- Low noise: Utilizing aerospace heat pipe cooling technology, the minimum noise of the power module does not exceed 60dB.
- Strong overload capacity: The HSVG device can operate for a long time at 1.1 times the rated current and for no less than 30 seconds at 1.2 times the rated current.
- Low harmonics :HSVG adopts a chain main circuit structure and high-frequency PWM control technology, generating very few harmonics and reducing the pollution caused by harmonics.
- Fast response: The HSVG hardware system uses high-power switching devices, with a full response time of no more than 10ms.
- Redundancy: The power units of the device adopt n+1 redundancy to enhance operational reliability and extend service life.
- Modularization: The entire series of units are designed in a modular way, featuring an attractive appearance and convenient maintenance.
- Fast computing: Multi-core parallel processing technology enables instructions to be completed within nanoseconds.

Model description

HSVG – □ – □

- Rated capacity :Mvar
- Rated voltage :kv
- High-voltage static reactive power generation device

Main technical parameters

Grid voltage	3\6\10\27.5\35kV	Average power factor	⩾0.98
Output rated power	1~100Mvar	Valve group structure	Chain H-bridge voltage source inverter
Power loss	Under rated conditions, it shall not exceed 1% of the rated power of the controlled object	Control mode and accuracy	Voltage control, reactive power control, combined voltage and reactive power control, control of PCC point voltage, accuracy 0.5%
Control system	All-digital control system	Response time	⩽10ms
Adjustment method	Inductive/capacitive reactive power is adjustable	Voltage flicker improvement rate	⩾70%
Auxiliary power supply	380V\220V\110V AC/DC	Reactive power regulation range	-100%~+100%
Cooling method	Air-cooled, water-cooled	Noise level	⩽60dB

Conditions of use

Ambient temperature	-25°C to +45°C(Customizable for special ambient temperatures)
Relative humidity	No more than 95%
Altitude	Not exceeding 1000m(customizable for high altitudes)
Maximum operating voltage	Not exceeding 110% of the rated voltage (except during the transition process)
Maximum load current	Not exceeding 130% of the rated current (except during the transition process)
Surrounding medium	There is no explosion or flammability hazard, no gas that can damage insulation or corrode metals, and no conductive dust
Installation location	No severe vibration or jolting, and the installation inclination should not exceed 5%
Power supply	It complies with national standards and does not have strong harmonic components

System composition

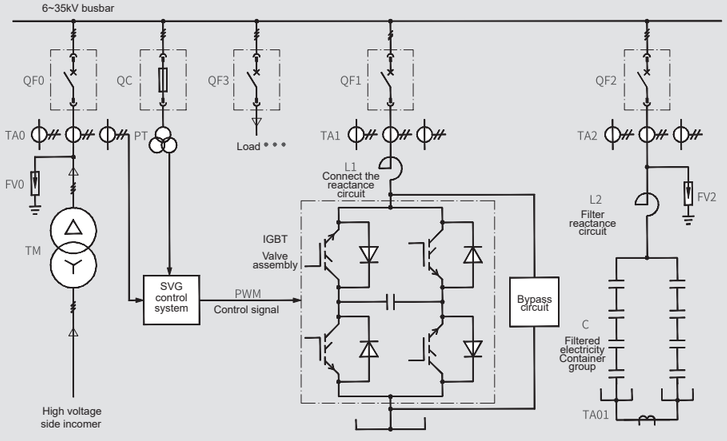

Operating system

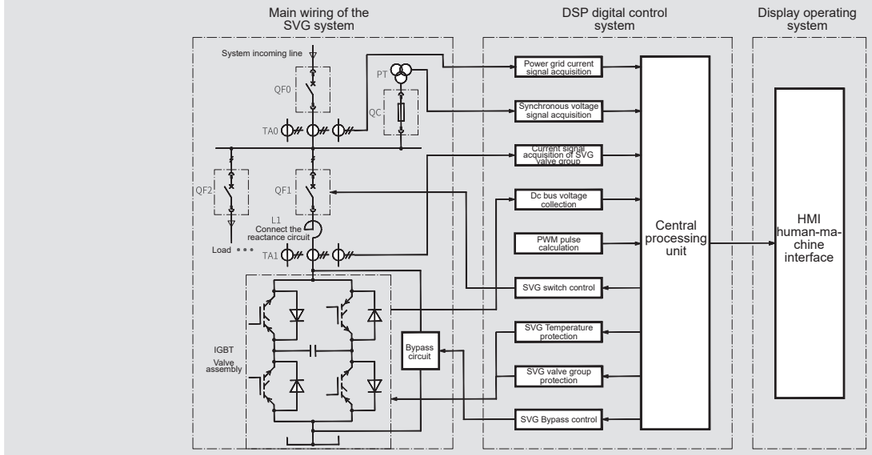

Selection Instructions

- When placing an order, system parameters, load characteristics, reactive power capacity and harmonic parameters, etc. should be provided
- Determine whether to adopt a direct connection or reduced-voltage scheme, as well as the main control objectives and operation modes
- Determine whether to use water cooling or air cooling for heat dissipation
- Determine whether to adopt indoor installation or outdoor container installation

Selection example

The rated voltage of a certain chemical plant system is 10kV, and it needs to compensate for 5Mvar reactive power while also filtering out harmonics of the 13th order and below. If a cabinet solution is adopted, a static reactive power generation device of model HSVG-10-5 is selected, with a total size of 4100x1400x2400mm(WxDxH).

LVCT Series

Low-voltage dynamic reactive power compensation device

The low-voltage contactless dynamic reactive power compensation device, based on the actual reactive power demand of the system, adopts instantaneous reactive power theory, harmonic analysis, dynamic measurement and calculation, and operates reasonably. It uses the STS dynamic reactive power compensation switching regulator to quickly switch on and off multi-stage capacitor banks, providing dynamic reactive power for the power system.

This device is suitable for places where rapid impact loads or three-phase imbalance require phase-to-phase compensation. It is widely used by users in industries such as mechanical manufacturing, metallurgy, mining, coal, chemical engineering, tap water, building materials, ports, and electrified railways that need reactive power compensation.



Product features

- The STS series dynamic reactive power compensation switching regulator is adopted, with voltage zero-crossing input and current zero-crossing cut-off, achieving contactless, inrush current and no-transition switching.
- The STS series dynamic reactive power compensation switching regulator adopts photoelectric triggering technology. The primary system and the secondary system are completely isolated, ensuring the synchronization of trigger signals and the safe operation of the device. It features low control power, fast action response time, no arc during action, frequent action capability, and a long service life.
- A hybrid compensation method of common compensation and individual compensation can be adopted to meet the needs of phase-by-phase compensation, reduce system imbalance, and carry out reactive power compensation more reasonably.
- The SLC series dynamic power factor controller is adopted, which has strong anti-interference ability and can resist 2000V interference pulses directly input from the power supply. It can separately measure three-phase voltage, current, reactive power and power factor, and can measure and display the 2nd to 50th harmonic voltage and current.
- Real-time automatic detection of system power factor and reactive power; Based on a comprehensive assessment, a multi-loop intelligent coding switching method can be adopted to achieve optimal control.
- Capacitors can be manually or automatically switched on and off to meet on-site control requirements.
- The SC series low-voltage self-healing shunt capacitors are adopted, featuring low loss, low operating temperature, long service life and self-healing function.
- This device is equipped with protection systems for overload, short circuit, phase loss, harmonics, overvoltage and undervoltage. At the same time, it is provided with a lightning arrester to absorb operating overvoltage. To suppress harmonics, SR series low-voltage series reactors can be configured.
- It is equipped with an RS485 communication interface to achieve remote communication.
- The structure is reasonable, the hierarchy is clear, the wiring is neat, and it is convenient for maintenance and upkeep.

Model description

LVCT – □ – □ / □ – □

- R: With reactor but not marked: No reactor
- Grouping method
- Rated capacity of the device :kvar
- Rated voltage of the device :kV
- Low-voltage contactless dynamic reactive power compensation device

Main technical parameters

Rated voltage	0.22 ~ 0.69 kV
Single group capacity	⩽ 60kvar(Large capacity customizable)
Response time	⩽15ms
Compensation method	Total compensation/partial compensation
Wiring method	△(3 phase compensation)Y(phase-split compensation)
Control mode	Cyclic/Encoding
Device structure	Cabinet type
Cooling method	Self-cooling/air-cooling

Conditions of use

Ambient temperature	-25°C to +45°C(Customizable for special ambient temperatures)
Relative humidity of air	⩽95%
Maximum operating voltage	⩽1.1UN
Maximum load current	⩽1.3IN
Installation location	There should be no severe vibration and the inclination Angle should not exceed 5%
Surrounding medium	There are no explosive or flammable hazardous materials, no harmful gases that corrode metals or damage insulation, and no conductive dust
Quality of power supply system	It complies with national standards and has no strong harmonics

Execution and reference standards

IEC60831-1:2014	《Shunt power capacitors of the self-healing type for a.c. systems having a ratedvoltage up to and including 1 000 V - Part 1: General - Performance, testing andrating-Safety requirements - Guide for installation and operation》
GB/T 12747.1-2017	Self-healing Shunt Capacitors for AC Power Systems with Nominal Voltage of 1000V and Below
GB/T 22582-2023	"Low-voltage Power Factor Correction Device for Power Capacitors"
GB50227-2017	"Code for Design of Shunt Capacitor Installations"

Primary electrical schematic diagram and configuration selection plan

■ **Electrical wiring diagram**

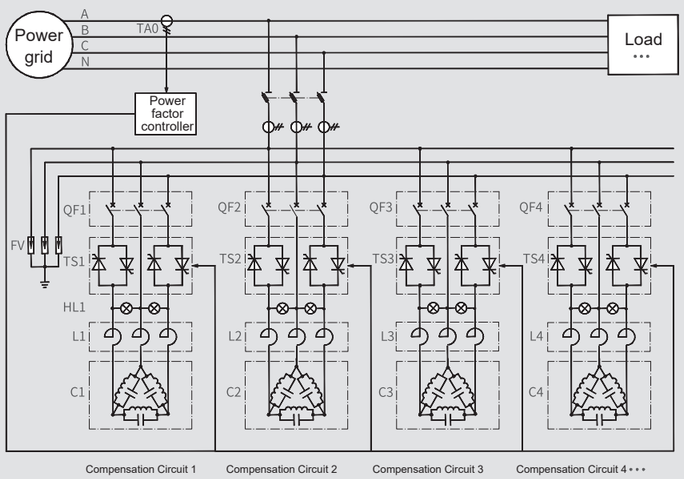

■ **Selection plan**

Rated capacity (kvar)	120		180		240		300		360		450		500	
Product model	LVCT-0.4-120/6-R		LVCT-0.4-180/6-R		LVCT-0.4-240/6(8)-R		LVCT-0.4-300/6(10)-R		LVCT-0.4-360/8(10)-R		LVCT-0.4-450/10-R		LVCT-0.4-500/10-R	
Main configuration	Model or code	Quantity	Model or code	Quantity	Model or code	Quantity	Model or code	Quantity	Model or code	Quantity	Model or code	Quantity	Model or code	Quantity
Power factor controller	SLC	1	SLC	1	SLC	1	SLC	1	SLC	1	SLC	1	SLC	1
Knife fuse switch	QSA	1	QSA	1	QSA	1	QSA	1	QSA	1	QSA	2	QSA	2
Current transformer	ALH	3	ALH	3	ALH	3	ALH	3	ALH	3	ALH	3	ALH	3
Lightning arrester	Y1.5W	3	Y1.5W	3	Y1.5W	3	Y1.5W	3	Y1.5W	3	Y1.5W	3	Y1.5W	3
Miniature circuit breaker	DZ47	6	DZ47	6	DZ47	6/8	DZ58	6/10	DZ58	8/10	DZ58	6	DZ58	6
Special use	STS	6	STS	6	STS	6/8	STS	6/10	STS	8/10	STS	10	STS	10
Series reactor	SR	6	SR	6	SR	6/8	SR	6/10	SR	8/10	SR	10	SR	10
Shunt capacitor	SC	6	SC	6	SC	6/8	SC	6/10	SC	8/10	SC	10	SC	10

※ The performance parameters of the components in the device refer to the component samples

Note: The above typical designs are our company's standard cabinet types
For other design configurations, please consult our company

Product external dimensions

Serial number	Cabinet size (WxDxH mm)	Maximum capacity (kvar)		Maximum number of routes (routes)	
		No reactors in series	Series 7% reactor	No reactor in series	Series 7% reactor
1	800x800x2200	300	200	6	4
2	1000x800x2200	450	300	9	6
3	1000x1000x2200	600	400	12	8

Selection Instructions

- In the order model, the rated voltage of the device, the rated capacity of the device and the grouping method should be indicated. Other special requirements must be specified. The LVCT series contactless dynamic
- compensation device generally adopts centralized compensation, cabinet structure, can be paralleled with all mainstream low-voltage switch cabinet types, and is suitable for different busbar fixed positions and methods
- The configuration and structural dimensions of the device can be negotiated and determined according to the user's requirements

Selection example
If the rated voltage of a certain system is 0.4kV and the installation capacity needs to be compensated for 240kvar, it is recommended to use the contactless reactive power dynamic compensation device of model LVCT-0.4-240/8-R, which can achieve 8-stage compensation. It is composed of 1 cabinet with dimensions of 1000X800X2200mm.

LVCA Series

Low-voltage static reactive power compensation device

The low-voltage contact-type static reactive power compensation device uses a dedicated AC contactor for capacitors to switch capacitor banks. It is suitable for places where the load changes in distribution substations are relatively stable. It automatically adjusts the compensation capacity according to the reactive power changes in the low-voltage system. It can also adopt an outdoor pole-mounted structure to compensate for the reactive power of the line, which is used to improve the quality of the power grid, increase the power factor, and reduce the reactive power loss of the power grid.

This device is mainly applied to users in industries such as mechanical manufacturing, metallurgy, mining, coal mines, chemical engineering, tap water, building materials, residential communities, and high-rise buildings who require reactive power compensation.



Product features

- The time-limiting resistor wire is connected in series in the circuit to limit the transient inrush current and extend the service life of the capacitor.
- When the switch is closed, it has low resistance, large conduction capacity, small voltage drop, low power consumption and no waveform distortion.
- The SLC series dynamic power factor controller is adopted, which has strong anti-interference ability and can resist 2000V interference pulses directly input from the power supply. It can measure voltage, current, reactive power and power factor respectively. It can measure and display the 2nd to 50th harmonic voltages and currents.
- Real-time automatic detection of system power factor and reactive power, comprehensive judgment, can adopt multi-loop cyclic switching or intelligent coded switching operation mode to achieve optimal control.
- Capacitors can be manually or automatically switched on and off to meet on-site control requirements.
- The SC series low-voltage self-healing shunt capacitors are adopted, featuring low loss, low operating temperature, long service life and self-healing function.
- This device is equipped with protection systems such as overload, short circuit, phase loss, harmonics, overvoltage and undervoltage. At the same time, a lightning arrester is installed to absorb the operating overvoltage. To suppress harmonics, SR series low-voltage series reactors can be configured.
- It is equipped with an RS485 communication interface to achieve remote communication.
- The structure is reasonable, the hierarchy is clear, the wiring is neat, and it is convenient for maintenance and upkeep.

Model description

LVCA □ – □ / □ – □

- LVCA: Low-voltage contact type static reactive power compensation device
- First □: Rated voltage of the device :kV
- Second □: Rated capacity of the device :kvar
- Third □: Grouping method
- Fourth □: R: With reactor but not marked: No reactor

Conditions of use

Ambient temperature	-25°C to +45°C(Customizable for special ambient temperatures)
Relative humidity of air	⩽95%
Maximum operating voltage	⩽1.1UN
Maximum load current	⩽1.3IN
Installation location	There should be no severe vibration and the inclination Angle should not exceed 5%
Surrounding medium	There are no explosive or flammable hazardous materials, no harmful gases that corrode metals or damage insulation, and no conductive dust
Quality of power supply system	It complies with national standards and has no strong harmonics

Main technical parameters

Rated voltage	0.22 ~ 0.69 kV
Single group capacity	⩽ 50kvar(Large capacity customizable)
Wiring method	△
Grouping method	Cyclic/Encoding
Device structure	Cabinet type
Cooling method	Self-cooling (air-cooled)
Control physical quantities	Power factor & Reactive power

Execution and reference standards

IEC 60871-1:2014	《Shunt power capacitors of the self-healing type for a.c. systems having a ratedvoltage up to and including 1 000 V - Part 1: General - Performance, testing andrating-Safety requirements - Guide for installation and operation》
GB/T 12747.1-2017	Self-healing Shunt Capacitors for AC Power Systems with Nominal Voltage of 1000V and Below
GB/T 22582-2023	"Low-voltage Power Factor Correction Device for Power Capacitors"
GB 50227-2017	"Code for Design of Shunt Capacitor Installations"

Primary electrical schematic diagram and configuration selection plan

■ **Electrical wiring diagram**

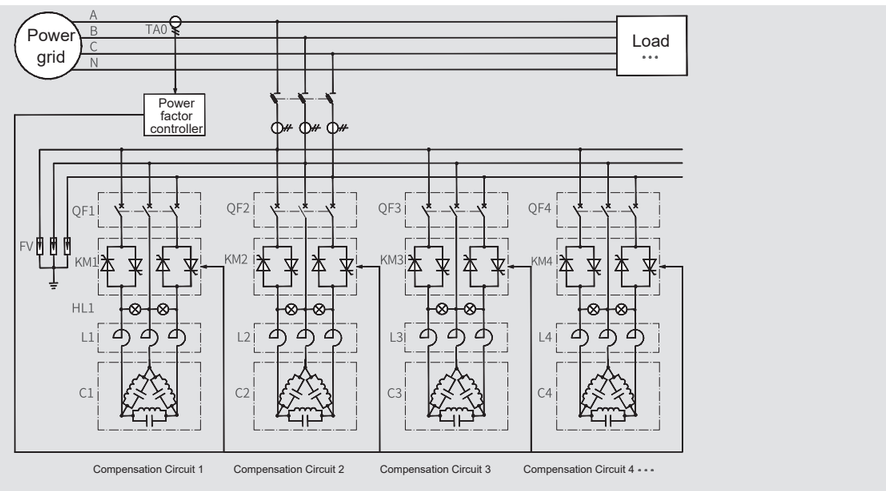

■ **Selection plan**

Rated capacity (kvar)	120		180		240		300		360		450		500	
Product model	LVCA-0.4-120/6-R		LVCA-0.4-180/6-R		LVCA-0.4-240/6(8)-R		LVCA-0.4-300/6(10)-R		LVCA-0.4-360/8(10)-R		LVCA-0.4-450/10-R		LVCA-0.4-500/10-R	
Main configuration	Model or code	Quantity	Model or code	Quantity	Model or code	Quantity	Model or code	Quantity	Model or code	Quantity	Model or code	Quantity	Model or code	Quantity
Power factor controller	SLC	1	SLC	1	SLC	1	SLC	1	SLC	1	SLC	1	SLC	1
Knife fuse switch	QSA	1	QSA	1	QSA	1	QSA	1	QSA	1	QSA	2	QSA	2
Current transformer	ALH	3	ALH	3	ALH	3	ALH	3	ALH	3	ALH	3	ALH	3
Lightning arrester	Y1.5W	3	Y1.5W	3	Y1.5W	3	Y1.5W	3	Y1.5W	3	Y1.5W	3	Y1.5W	3
Miniature circuit breaker	DZ47	6	DZ47	6	DZ47	6/8	DZ58	6/10	DZ58	8/10	DZ58	6	DZ58	6
Special use	CJX4	6	CJX4	6	CJX4	6/8	CJX4	6/10	CJX4	8/10	CJX4	10	CJX4	10
Series reactor	SR	6	SR	6	SR	6/8	SR	6/10	SR	8/10	SR	10	SR	10
Shunt capacitor	SC	6	SC	6	SC	6/8	SC	6/10	SC	8/10	SC	10	SC	10

※ The performance parameters of the components in the device refer to the component samples

Note: The above typical designs are our company's standard cabinet types
For other design configurations, please consult our company

Product external dimensions

Serial number	Cabinet size (WxDxH mm)	Maximum capacity (kvar)		Maximum number of routes (routes)	
		No reactors in series	Series 7% reactor	No reactor in series	Series 7% reactor
1	800X800X2200	300	200	6	4
2	1000X800X2200	600	400	12	8
3	1000X1000X2200	750	500	15	10

Selection Instructions

- In the order model, the rated voltage of the technical device, the installation capacity of the device and the grouping method should be indicated. Other special requirements must be specified.
- The LVCA series of low-voltage contact-type static reactive power compensation devices generally adopt centralized compensation and cabinet structure. They can be paralleled with all mainstream low-voltage switch cabinet types and are suitable for different busbar fixed positions and methods.
- If the rated voltage of the technical capacitor is higher than the bus voltage, or if a series reactor is configured, the output capacity and installation capacity should be verified.
- The configuration and structural dimensions of the device can be determined through negotiation based on the user's requirements.

Selection example

If the rated voltage of a certain system is 0.4kV, and it is necessary to compensate for an installation capacity of 240kvar, and 79 reactors are required to suppress harmonics of the 5th order and above and limit inrush current during closing, with cyclic switching, then it is recommended to use the low-voltage contact-type static reactive power compensation device of model LVCA-0.4-240/8-R, which can achieve 8-level compensation. It is composed of 1 cabinet with dimensions of 1000X800X2200mm.

LVCM Series

Low-voltage modular reactive power compensation device

The LVCM series low-voltage modular dynamic reactive power compensation device of Sanhe Power Tech adopts a modular design concept, breaking through the traditional approach. It features a compact fixed modular structure, which is suitable for matching with cabinets of different profiles and models. It can effectively save electricity, enhance the load-carrying capacity of equipment, improve the quality of the power grid, compensate for the reactive power of the system, and increase the power factor. Reduce reactive power loss in the power grid and control harmonic pollution.



Product features

- It is composed of SFM fixed compensation modules. Two modules can be placed front and back on each horizontal plane, and the device has a high capacity-to-volume ratio characteristic.
- Each module is a complete compensation branch, with good matching of capacitors and reactance, and appropriate configuration of protection and switching switches.
- The number of modules and the configured compensation capacity can be adjusted as needed without the need for redesign.
- The SLC series dynamic power factor controller is adopted, which has strong anti-interference ability and can resist 2000V interference pulses directly input from the power supply. It can separately measure three-phase voltage, current, reactive power and power factor; it can measure and display the 2nd to 50th harmonic voltage and current.
- Real-time automatic detection of system power factor and reactive power, comprehensive judgment, can adopt multi-loop cyclic switching or intelligent coded switching operation mode to achieve optimal control.
- Capacitors can be manually or automatically switched on and off to meet on-site control requirements.
- The SC series low-voltage self-healing shunt capacitors are adopted, featuring low loss, low operating temperature, long service life and self-healing function.
- This device is equipped with protection systems for overload, short circuit, phase loss, harmonics, overvoltage and undervoltage. At the same time, it is provided with a lightning arrester to absorb operating overvoltage. To suppress harmonics, an SR series low-voltage series reactor can be configured.
- It is equipped with an RS485 communication interface to achieve remote communication.

Model description

LVCM–□–□/□–□

- R: With reactor but not marked: No reactor
- Grouping method
- Rated capacity of the device :kvar
- Rated voltage of the device :kV
- Low-voltage modular dynamic reactive power compensation device

Main technical parameters

Rated voltage	0.22 ~ 0.69 kV
Single group capacity	⩽ 50kvar(Large capacity customizable)
Response time	⩽15 ms
Wiring method	△
Grouping method	Cyclic/Encoding
Device structure	Cabinet type
Cooling method	Self-cooling (air-cooled)
Control physical quantities	Power factor & Reactive power

Conditions of use

Ambient temperature	25°C~ +45°C
Relative humidity	⩽ 95%
Maximum operating voltage	25°C~ +45°C
Maximum load current	95%
Installation location	There should be no severe vibration or jolting, and the installation inclination should not exceed 5%
Surrounding medium	There is no explosion or flammability hazard, no gas that can damage insulation or corrode metals, and no conductive dust
Quality of power supply system	It complies with national standards and has no strong harmonics

Primary electrical schematic diagram and configuration selection plan

Electrical wiring diagram

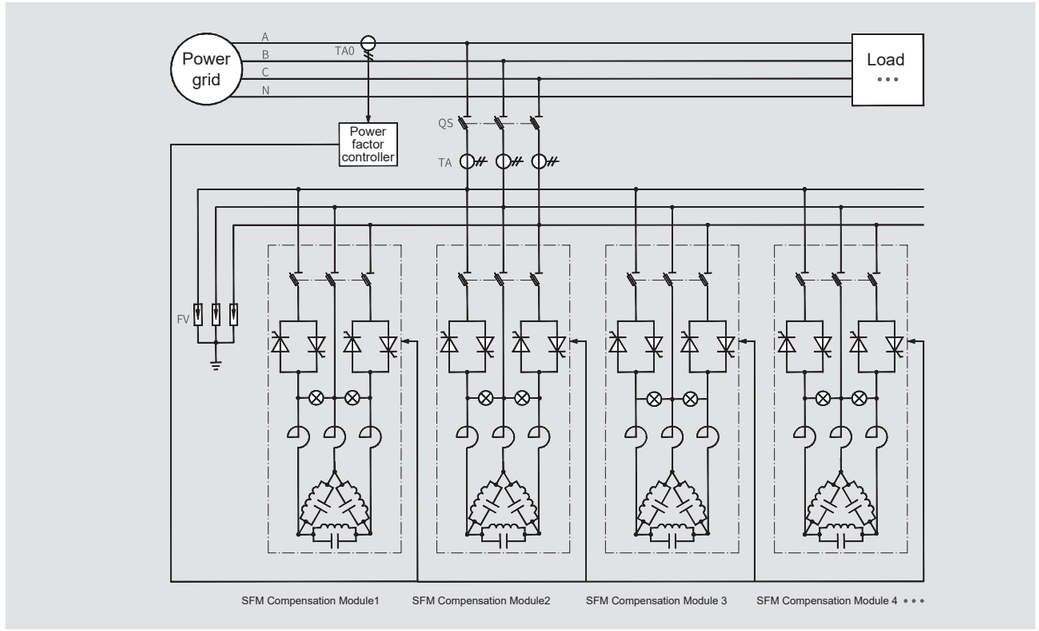

Selection plan

Rated Capacity (kvar)	120		180		240		300	
Product model	LVCM-0.4-120/6-R		LVCM-0.4-180/6-R		LVCM-0.4-240/6-R		LVCM-0.4-300/6-R	
Main configuration	Model or code	Quantity	Model or code	Quantity	Model or code	Quantity	Model or code	Quantity
Power factor controller	SLC	1	SLC	1	SLC	1	SLC	1
Knife fuse switch	QSA	1	QSA	1	QSA	1	QSA	1
Current transformer	AHL	3	AHL	3	AHL	3	AHL	3
Lightning arrester	Y1.5W	3	Y1.5W	3	Y1.5W	3	Y1.5W	3
Dynamic compensation unit	SFM	6	SFM	6	SFM	6	SFM	6
Cabinet body	S	1	S	1	S	1	S	1

Note: The cabinet size with the code S is 800x1000x2200mm
The performance parameters of the components in the device refer to the component samples

Product dimensions and selection instructions

- The voltage of a certain engineering system is 400V, and the transformer capacity is 1000KVA. The fundamental compensation capacity required is 200kvar. The load mainly generates harmonics of the 5th order and above. The compensation method is three-phase, with a compensation accuracy of 45kvar. The switching switch is a thyristor.
  Solution
  The selected device model is LVCM-0.4-270/6-R(270kvar is the installation capacity), and there are 6 modular dynamic compensation units SFM0.4-45T/7a

- The voltage of a certain engineering system is 400V, and the transformer capacity is 500KVA. The fundamental compensation capacity required is 125kvar. The load mainly generates harmonics of the third order and above. The compensation method is three-phase, with a compensation accuracy of 30kvar. The switching switch is a thyristor.
  Solution
  Eight modular dynamic compensation units SFM0.4-30T/14a of the selected device model is LVCM-0.4-180/6-R(180kvar is the installation capacity).

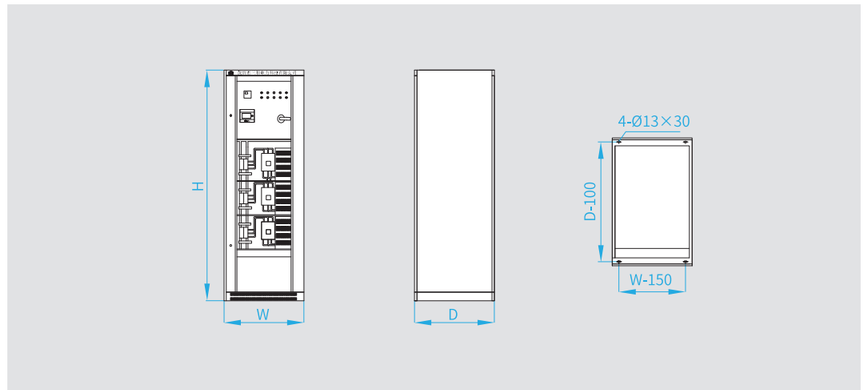

LSVG Series

Low Voltage Static Var Generator

LSVG is a revolutionary reactive power compensation device of the new generation and a typical power electronic equipment. Its principle is to directly parallel a self-commutating bridge circuit to the power grid through a reactor. By appropriately adjusting the phase and amplitude of the output voltage on the AC side of the bridge circuit or directly controlling the AC side current, the circuit can absorb or generate reactive current and harmonic current that meet the requirements. Achieve the purpose of dynamic reactive power compensation; Compared with traditional solutions, it has added the necessary harmonic control capacity. While effectively handling reactive power issues, it also resolves the impact caused by harmonics, completely solving the vast majority of power quality problems for users with the highest cost performance.



Product features

- One machine with multiple functions, capable of simultaneously addressing harmonics, reactive power and three-phase imbalance.
- It features multiple installation methods such as modular design and cabinet design, and can be wall-mounted or configured with standard cabinets according to the user's system conditions.
- The maximum capacity of a single cabinet is 750kvar, and the occupied area is much smaller than that of the compensation scheme based on traditional capacitors. Two devices can be connected in parallel to cover the comprehensive compensation capacity of all low-voltage transformers.
- The input voltage and frequency range are suitable for grid fluctuations and can perform continuous reactive power compensation and harmonic filtering.
- Controlled by a dual DSP +FPGA triple-core processor unit, it features real-time tracking, dynamic compensation, and a fast dynamic response speed (μs level response).
- Compared with the traditional capacitor compensation scheme,LSVG can achieve bidirectional compensation for both capacitive and inductive power. The reactive power compensation is continuous, with a compensation error of less than 1%.
- It presents an infinite impedance to the power grid system and does not affect the impedance of the power grid system. And the output waveform is precise and will not affect other devices.
- Low power consumption (less than 2% of the rated power), actual efficiency >98%
- Real-time flexible monitoring, remote monitoring via a computer through a communication interface, facilitating centralized control and management. It is equipped with a standard remote monitoring interface and supports remote on/off.
- It features perfect functional Settings, automatic self-check startup, adjustable soft start time, emergency shutdown function and comprehensive system protection functions.
- Friendly Chinese and English operation interface, event recording.

Model description

LSVG – □ – □ / □

- Number of modules
- Rated capacity of the device :kvar
- Rated voltage of the device :kV
- Sanhe Electric static reactive Power Generator

Conditions of use

Rated voltage	0.22 ~ 0.8 kV
Grid frequency	50Hz ± 5%
Overall machine efficiency	⩾97.5%
Response time	⩽ 5ms
Communication interface	RS485
Communication protocol	Modbus Protocol
Protection grade	IP20
Noise level	⩽60dB

Conditions of use

Ambient temperature	25°C~ +45°C
Relative humidity	⩽ 95%
Altitude	Altitude <1500m(for every additional 100 meters, the compensation capacity decreases by 1%)
Maximum operating voltage	Not exceeding 110% of the rated voltage (except during the transition process)
Maximum load current	Not exceeding 130% of the rated current (except during the transition process)
Surrounding medium	There is no explosion or flammability hazard, no gas that can damage insulation or corrode metals, and no conductive dust
Installation location	There should be no severe vibration or jolting, and the installation inclination should not exceed 5%

Execution and reference standards

IEC60747-9-2019	"Semiconductor devices - Discrete devices - Part 9: Insulated Gate Bipolar Transistors (IGBTS)"
GB/T 14549-1993	"Power Quality - Harmonics in Public Power Grids"
GB/T 3797-2006	"Electrical Control Equipment"
JB/T 8951.1-2025	"Insulated Gate Bipolar Transistor"
DL/T 1216-2019	"Technical Specification for Low-Voltage Static Reactive Power Generation Devices"

Electrical schematic diagram

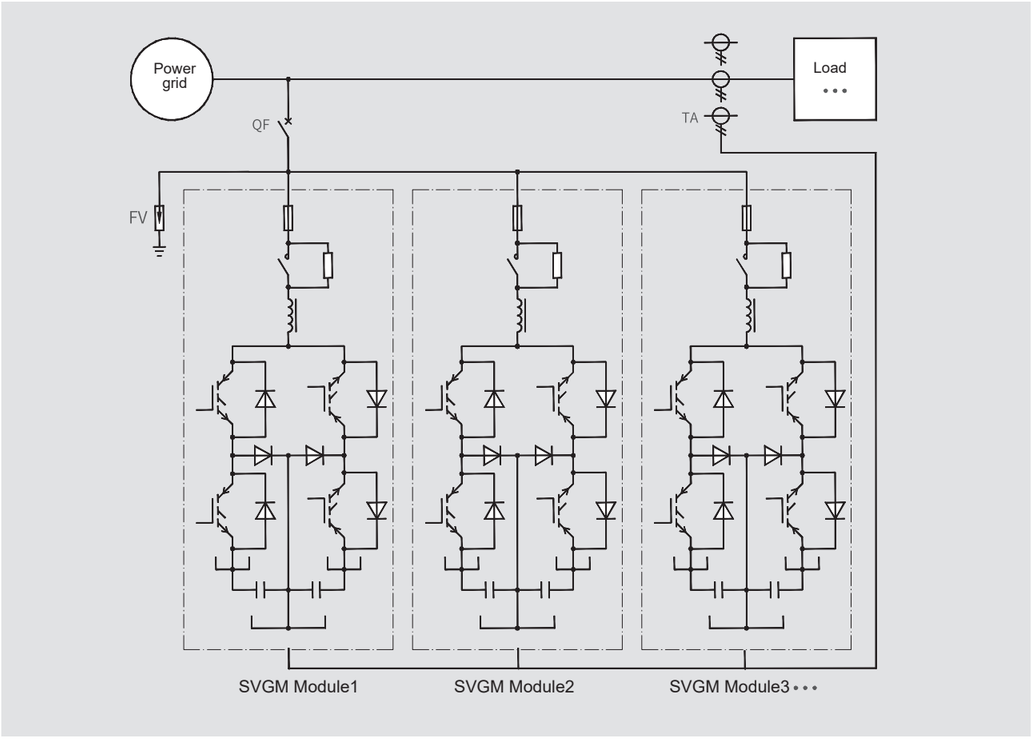

Selection Instructions

- In the order model, the rated voltage and rated capacity of the device should be indicated. Other special requirements must be specified.
- The LSVG series static reactive power generator has two structural types, integrated cabinet type and modular combination cabinet type. It can be combined with all mainstream low-voltage switch cabinet types and is suitable for different busbar fixed positions and methods.
- The configuration and structural dimensions of the device can be negotiated and determined according to the user's requirements.

Selection example
If the rated voltage of a certain system is 0.4kV and reactive power compensation of ± 400kvar is required, it is recommended to use the static reactive power generator of model LGG-0.4-400/4, which consists of 4 100kvar modules and is composed of 1 cabinet, with dimensions of 800x1000x2200mm.

LVAF Series

Low Voltage Active Power Fillter

The low-voltage active filter compensation device is a new type of power electronic device that dynamically suppresses harmonics and compensates reactive power. By real-time detection of voltage and current waveforms and reactive power components, and through internal DSP calculation, it extracts the harmonic components of the load current, and injects the harmonic currents of various frequencies and fundamental reactive currents with opposite phases into the power supply system, which can filter out harmonics, dynamically compensate reactive power, and improve Power quality.

The active power filter compensation device overcomes the shortcomings of traditional passive power filter devices, such as poor filtering effect, easy resonance with the system, and only being able to filter out fixed harmonics. It is suitable for various working conditions, such as frequency converters, medium-frequency furnaces, electrolytic electroplating equipment, medical instruments, electrified railways, UPS, elevators, and modern office equipment, as well as various fast transient impact loads or nonlinear loads.



Product features

- The device adopts a fully digital control mode of DSP+FPGA and is based on the current detection technology of instantaneous reactive power, which can automatically multiplex and instantaneously track the harmonics generated by the load.
- It can instantly eliminate the 2nd to 51st harmonics in the power supply system, or choose to filter out any harmonic within the 2nd to 50th order.
- It features high controllability and rapid response. Its filtering characteristics are not affected by system impedance and can eliminate the risk of resonance with it.
- This device is capable of compensating reactive power (the compensation is stepless), and the compensation does not require energy storage components. It can also suppress voltage flicker.
- Modular design, parallel installation, easy to install and maintain, convenient for expansion, low loss, and no maintenance required for non-self-faults.
- All the key components inside the module are made of well-known brands.
- The active power filter module adopts a diode-clamped capacitor midpoint three-level topology and operates in a high-frequency switching mode. It combines IGBT with drive and protection circuits to form a unit structure, making the converter feature small size, high efficiency and high reliability.
- The device automatically limits the output to 100% within the rated capacity range. When the harmonic current on the load side exceeds its rated capacity, the active power filter can continue to output current within the rated capacity to compensate for harmonics, and there will be no equipment overload or shutdown due to overloading.
- It has a rapid and complete self-checking function for faults, issues alarm signals, and automatically takes corresponding operations at the same time.

Model description

LVAF – □ – □ / □

- The number of modules is not marked for the integrated cabinet structure
- Rated capacity of the device :A
- Rated voltage of the device :kV
- Low-voltage active power filter device

Main technical parameters

Rated voltage	0.22 ~ 0.8 kV
Module capacity	Module capacity ≤150A
Control system	Dual DSP+FPGA
Response time	⩽5ms
Number of filters	2nd to 51st harmonics
Device structure	Integrated cabinet type, modular combination cabinet type
Cooling method	Air-cooled

Conditions of use

Ambient temperature	25°C~ +45°C
Relative humidity	⩽ 95%
Altitude	Altitude <1500m(for every additional 100 meters, the compensation capacity decreases by 1%)
Maximum operating voltage	Not exceeding 110% of the rated voltage (except during the transition process)
Maximum load current	Not exceeding 130% of the rated current (except during the transition process)
Surrounding medium	There is no explosion or flammability hazard, no gas that can damage insulation or corrode metals, and no conductive dust
Installation location	There should be no severe vibration or jolting, and the installation inclination should not exceed 5%

Execution and reference standards

GB/T 14549-1993	"Power Quality - Harmonics in Public Power Grids"
JB/T 11067-2011	"Low-voltage Active Power Filter Device"

Primary electrical schematic diagram and configuration selection plan

■ Electrical wiring diagram

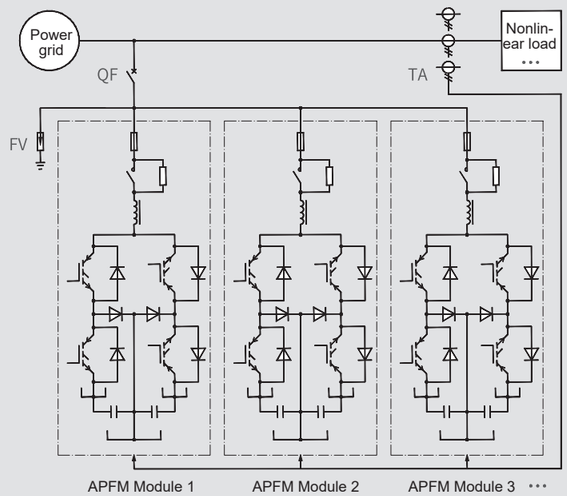

Selection plan

Rated capacity(A)	25		35		50		75		100		150		200	
Product model	LVAF-0.4-25/1		LVAF-0.4-35/1		LVAF-0.4-50/1		LVAF-0.4-75/1		LVAF-0.4-100/1		LVAF-0.4-150/1		LVAF-0.4-200/2	
Main configuration	Model code	Quantity	Model code	Quantity	Model code	Quantity	Model code	Quantity	Model code	Quantity	Model code	Quantity	Model code	Quantity
Molded case circuit breaker	QF	1	QF	1	QF	1	QF	1	QF	1	QF	1	QF	1
Current transformer	Open and close type	2/3	Open and close type	2/3	Open and close type	2/3	Open and close type	2/3	Open and close type	2/3	Open and close type	2/3	Open and close type	2/3
Active power filter module	APFM	1	APFM	1	APFM	1	APFM	1	APFM	1	APFM	1	APFM	2
Cabinet body	R	1	R	1	R	1	R	1	R	1	R	1	R	1
Rated capacity(A)	250		300		350		400		450		500		600	
Product model	LVAF-0.4-250/2		LVAF-0.4-300/2		LVAF-0.4-350/3		LVAF-0.4-400/3		LVAF-0.4-450/3		LVAF-0.4-500/4		LVAF-0.4-600/4	
Main configuration	Model code	Quantity	Model code	Quantity	Model code	Quantity	Model code	Quantity	Model code	Quantity	Model code	Quantity	Model code	Quantity
Molded case circuit breaker	QF	1	QF	1	QF	1	QF	1	QF	1	QF	1	QF	1
Current transformer	Open and close type	2/3	Open and close type	2/3	Open and close type	2/3	Open and close type	2/3	Open and close type	2/3	Open and close type	2/3	Open and close type	2/3
Active power filter module	APFM	2	APFM	2	APFM	3	APFM	3	APFM	3	APFM	4	APFM	4
Cabinet body	R	1	R	1	R	1	R	1	R	1	R	1	R	1

※ The performance parameters of the components in the device refer to the component samples

For devices with a capacity of no more than 150A, a wall-mounted structure can be adopted. In a three-phase three-wire system, the number of sampling current transformers is 2, and in a three-phase four-wire system, it is 3. The cabinet size with the code R is 800x1000x2200mm.

Selection Instructions

- The rated voltage and rated capacity of the device should be indicated in the order model. Other special requirements must be specified.
- The LVAF series of low-voltage active power filter compensation devices come in two structural types: integrated cabinet type and modular combination cabinet type. They can be paralleled with all mainstream low-voltage switch cabinets and are suitable for different busbar fixed positions and methods.
- The configuration and structural dimensions of the device can be negotiated and determined according to the user's requirements.

Selection example
If the rated voltage of a certain system is 0.4kV and it is necessary to filter out 200A harmonic current, it is recommended to use the low-voltage active power filter compensation device of model LVAF-0.4-200, which adopts an integrated cabinet structure and is composed of one cabinet with dimensions of 800X1000x2200mm, or use the low-voltage device of model LVAF-0.4-200/2 The active power filter compensation device adopts a 100A module and is composed of one cabinet in total, with dimensions of 600x1000x2200mm.

LDVR Series

Voltage stabilizing device

The LDVR series voltage stabilizing device adopts high-power power electronics technology and digital processing technology to rapidly detect the voltage transient process of the power system through the generalized second-order complex vector algorithm. When the grid voltage experiences a temporary rise, drop or short-term interruption, it responds at the micrometer level, feeding back the pre-stored energy in the supercapacitor to the primary load to ensure normal production.

This device adopts an intelligent control mode, flexibly setting the control logic according to the actual working conditions of the user. It is widely applied in industries that are sensitive to voltage, such as petrochemicals, electronics, semiconductors, precision manufacturing, automobiles, pharmaceuticals, hospitals, metallurgy, and mechanical processing. It is currently the best way to prevent "power flickers".



Product features

- The rectification, filtering, inversion and energy storage links all adopt modular design, which is convenient for maintenance.
- The system adopts a control platform composed of high-performance controllers and high-performance power distributors.
- It adopts a dual-chip control architecture of DSP+FPGA. External signals such as bus, voltage/current acquisition, etc. are uniformly processed in real time by FPGA. The DSP and FPGA exchange data in real time via a parallel bus, enabling high-speed and high-precision loop control operations and ensuring the excellent dynamic response and control performance of the voltage stabilizing system.
- By adopting advanced control algorithms and forced commutation technology, full response is achieved within 3ms to ensure the normal operation of the power load.
- High-voltage integrated supercapacitors, equipped with bidirectional AC/DC controllers, feature high power density and high energy utilization rate.

Model description

LDVR – □ / □

- Rated capacity :kVA
- Rated voltage :kV
- Low-voltage voltage stabilizing device

Main technical parameters

Basic parameters	Voltage level	208V-10kV
	Rated capacity	10-3000kVA
	Compensation scope	0% - 130%
	Compensation time	0-10 seconds (time customizable)
Grid-side parameters	Frequency	50Hz(60Hz) ± 5%
	Efficiency	99.2%
	Overload capacity	Overload by 150% and maintain for 60 seconds; Overload by 500% and maintain for 1 second
	Wiring method	Three-phase three-wire/three-wire four-wire
Output parameters	Overcompensation voltage protection	OK
	Output frequency	50Hz
	Compensate for the full response time	<1ms
	Compensation accuracy	< 1%
Energy storage	Design life	15 years (25℃
	Cycle count	> 1000000

Working principle

Category	Simple diagram	Voltage range	Equipment type
DC parallel compensation	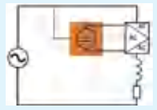	0.2 to 1.8p.u.	It has a DC bus link
AC string supplement	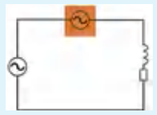	0.6 to 1.4p.u.	High-load fluctuation equipment
Communicate and supplement		0 to 0.8p.u. And 1.2 to 1.8p.u.	Sensitive load
Secondary compensation	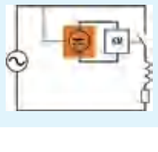	0 ~ 0.8 p.u.	AC contactor

Technical specifications

Category	Response time	Compensation time
Dc parallel compensation	<200 μs	1~3s
Ac string supplement	<100 μs	20% run for a long time
Communicate and supplement	<1ms	1~3s

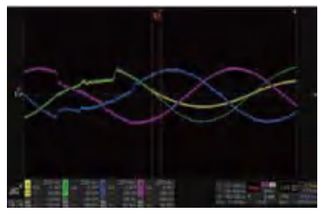

Primary electrical schematic diagram

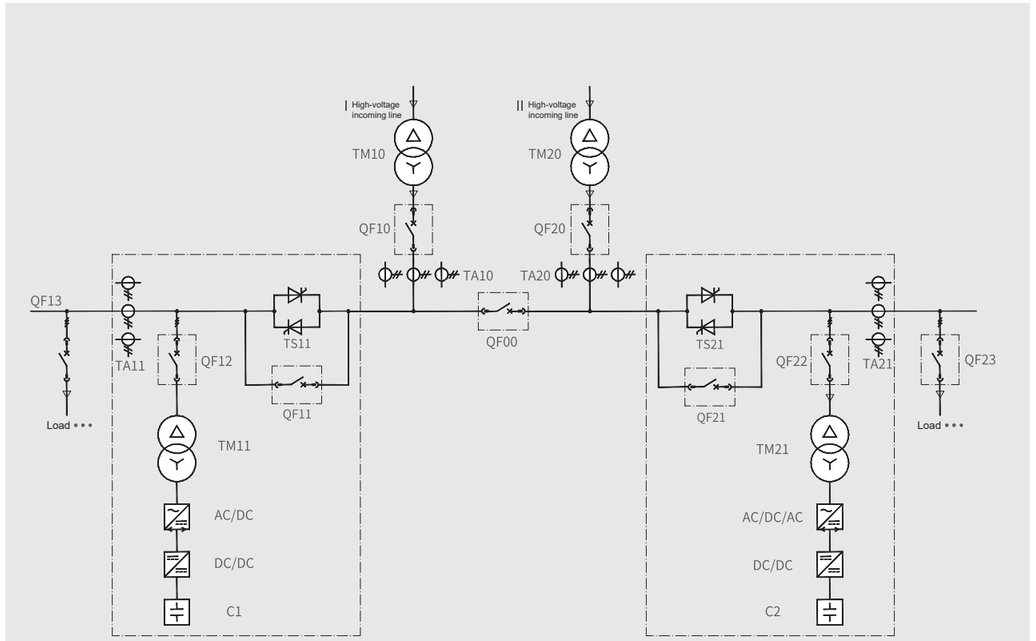

Compensation object

- A single set of total capacity LDVR is directly compensated on the DC bus or AC bus, which is conducive to construction and later statistics.
- Composed of multiple sets of LDVRS, each LDVR compensates for a single load, addressing the issue of insufficient centralized space.

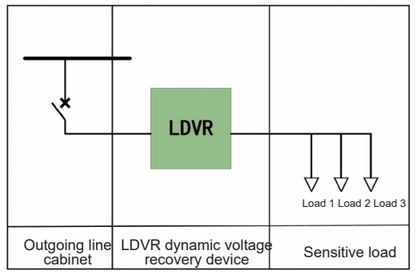

Busbar compensation

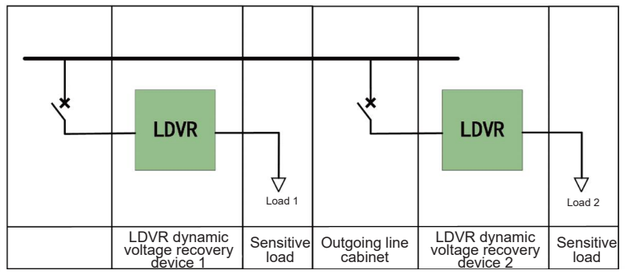

Compensation by the busbar load compensation line

SZPW8 Series

High-frequency switching DC power supply screen

The SZPW8 series high-frequency switching DC power supply panel mainly provides power for power loads, control loads, and DC emergency lighting loads, etc., and serves as the foundation for power system control and protection. It is applicable to the opening and closing of circuit breakers, instruments and meters in secondary circuits, relay protection, starting of DC motors, fault lighting and various other power supply needs.



Product features

- 7-inch color touch screen with a friendly interface
- Voltage reduction silicon chain 5 groups /7 groups voltage regulation
- Comprehensive monitoring unit for current, voltage and temperature collection
- The insulation detection unit offers 30-channel insulation detection
- The battery inspection unit detects 24 batteries

Design selection

Device name	Input voltage	Capacity range	Feed-out loop	Cabinet dimensions (W*D*H)
SZPW8-F Wall-mounted DC power supply	Two AC220V circuits or one AC220V circuit	38Ah/DC220V or 65Ah/DC110V and below	Control female 2 channels + Combined female 2 channels	Customized size
SZPW8-U integrated DC power supply	Two AC380V circuits or two AC220V circuits	40Ah/DC220V or 65Ah/DC110V and below	Control 4 channels + Combine 4 channels	A single cabinet with dimensions of 800*600*2260mm is composed of one cabinet
SZPW8-C combined DC power supply	Two AC380V circuits or two AC220V circuits	100Ah/DC220V or 200Ah/DC110V and below	Control mother 5 channels + Combine mother 4 channels	A single cabinet with dimensions of 800*600*2260mm is composed of two cabinets
SZPW8-L high-capacity DC power supply	Two AC380V circuits or two AC220V circuits	120Ah/DC220V or 200Ah/DC110V and above	Control mother >5 channels + Combination mother >4 channels	A single cabinet of 800*600*2260mm is composed of more than two cabinets

Basic functions: Intelligent battery management, AC/DC parameter detection, sound and light alarm for system faults, real-time detection of busbar insulation resistance, and automatic voltage stabilization of control busbars.
Optional functions: Battery inspection, branch insulation detection, feed switch status detection, DC/AC inverter output, DC/DC step-down output, AC distribution output.

Main technical parameters

Input voltage	220/380V+15%	Output voltage	DC110V、DC220V
Rated frequency	50Hz or 60Hz	Altitude	⩽2,500 meters
Material of cabinet body	Cold-rolled steel plate	Ambient temperature	- 10 ℃ ~ + 45 ℃
Output current	5A~640A	Battery capacity	7~2000Ah
Rated current adjustment range	0 ~ 100%	Overall machine noise	⩽55dB(Ambient noise <40dB)
Float charging voltage range	DC98V~DC130V DC198V~DC260V		
Equalizing voltage range	DC98V~DC140V DC198V~DC280V		
enforce standards	GB/T 19826 DL/T 459		

SUAR Series

Three-phase Unbalance Load Automatic Regulator Device

The three-phase unbalance control series products of Sanhe Power Tech are composed of the UARM three-phase unbalance automatic regulation module and other functional modules, meeting customers' requirements for three-phase unbalance control and other needs.

The SUAR three-phase unbalance automatic regulation device of Sanhe Power Tech is the best choice for solving the problems of low overload phase voltage exceeding the limit, three-phase reactive power imbalance and low power factor that are commonly found at the end of low-voltage distribution networks due to three-phase load imbalance. In addition, according to customer needs, the product also offers options with reactive power compensation and harmonic control functions. The module collects the current and voltage signals of the distribution lines and, in accordance with the requirements of three-phase unbalance, reactive power, power factor and harmonic filtering, reasonably and quickly compensates for the reactive power of the system, filters out harmonics and regulates three-phase unbalance, so that the power factor of the main line system is controlled to 0.99, the harmonic filtering rate is 85% or above, and the three-phase unbalance regulation is within 5%. This will extend the service life of the transformer, increase its effective output capacity, reduce losses, improve the power quality of the distribution network, and enhance the power consumption environment.



Product features

- The power module inverter adopts IGBT devices of internationally renowned brands
- Multiple control modes can be freely set according to needs
- It is equipped with complete protection functions, including overload, overcurrent, short circuit, etc., and has a system startup self-diagnosis function
- It is equipped with a buffer start control circuit, which can prevent excessive input current at the moment of self-start
- The control system and the inverter adopt isolated signal transmission to avoid electromagnetic signal interference, making the device work more stably and reliably
- Phase independent control, capable of simultaneously achieving single-phase and three-phase compensation
- It is equipped with a built-in wireless communication module, enabling contactless operation, parameter setting and information reading
- An optional external communication module can be equipped to enable remote monitoring and data collection
- The device is installed on the column, which is simple to maintain and debug and convenient to transport

Model description

SUAR — 0.4 / □

- Rated capacity of the device :kvar
- Rated voltage of the device :kV
- Three-phase power three-phase unbalance automatic regulation device

Working principle

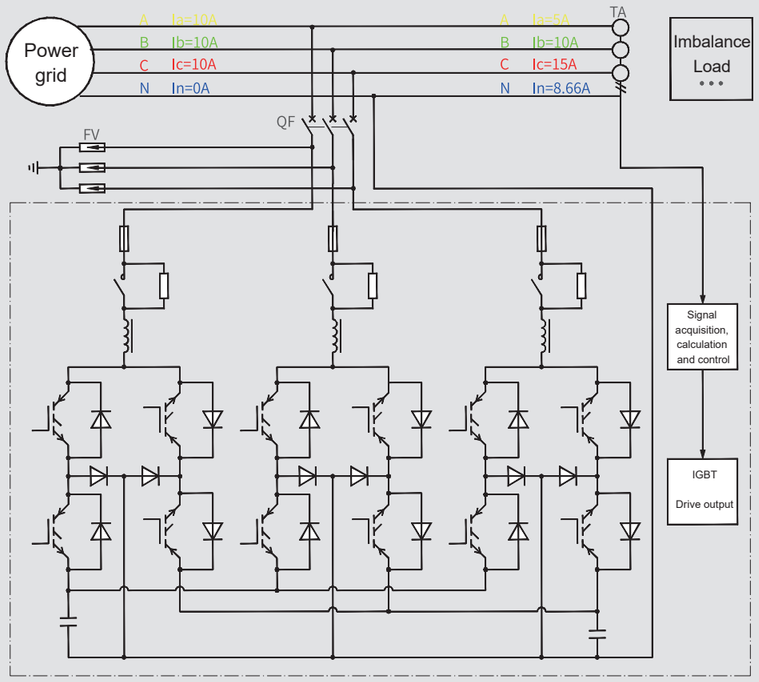

Three-phase voltage support principle

SUAR samples the compensation point voltage. Through internal DSP processing and analysis, when the voltage exceeds the upper limit of voltage regulation (Umax),SUAR outputs inductive current to reduce the voltage. When the voltage drops below the lower limit of voltage regulation (Umin),SUAR outputs capacitive current to increase the voltage and ensure that the voltages of each phase remain stable within the normal range.

Technical performance indicators

Model	SUAR-0.4/50	SUAR-0.4/75	SUAR-0.4/100
System parameters			
Nominal voltage	0.4 kV		
Input voltage range	80% ~ 120%		
Grid frequency	50Hz(60Hz)+5%		
Overall machine efficiency	> 97.5%		
Wiring method	Three-phase four-wire		
Circuit topology	Three levels		
Performance indicators			
Three-phase balance compensation capacity	Degree of imbalance ＜5%		
Rated capacity	50kvar	75kvar	100kvar
Reactive power compensation output	Capacitive output or inductive output		
Compensation current	75A	100A	150A
Response time	＜5ms		
Protective function	Output overcurrent, grid overvoltage, system over-temperature, phase sequence misalignment, resonance protection, synchronous failure, frequency deviation, short-circuit protection, etc		
Communication method			
Communication interface	RS485		
Communication protocol	Modbus		
Mechanical properties			
Size	850×335×850mm	850×345×1000mm	880×365×1086mm
Color	Stainless steel itself		
Weight	60kg	70kg	120kg
Installation method	Outdoor installation		
Conditions of use			
Operating temperature	-20°C~+50°		
Altitude	<1500m(for every additional 100 meters, the compensation capacity decreases by 1%)		
IP rating	IP44		

SDUR series

Three-phase Unbalance Load Regulator and Cable Distribution Box

The UARM module is organically and reasonably integrated into the outdoor cable distribution box, making it an intelligent device that not only has the function of cable distribution but also has the functions of three-phase unbalance regulation, reactive power compensation and harmonic control.

The SDUR three-phase unbalance type cable distribution box offers an extremely high cost-performance ratio. It integrates the functions of power distribution, three-phase unbalance regulation, reactive power compensation and harmonic control. It conducts power quality control as close as possible to the end of the distribution system, which can effectively reduce the effective value of three-phase current and the neutral line current. Reducing the loss of the main transmission line while lowering equipment investment, maintenance costs and space occupation, it is the best solution to the power quality problems of distribution lines.

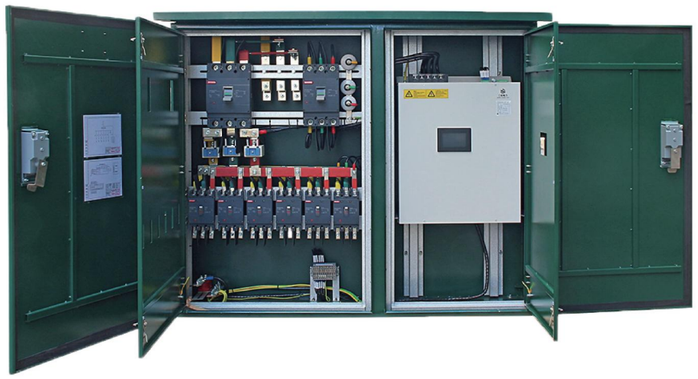

Product features

Innovative design
New concept: Integrating user demands, a brand-new application and structural design concept
New function: It adds new module functions to the conventional cable distribution box, which can not only compensate for capacitive or inductive reactive power, but also filter out system harmonics, solve the problem of three-phase imbalance, eliminate voltage fluctuations caused by reactive power, reduce line losses, and improve the power quality of the system in real time
One machine with multiple uses
Meet the functional requirements of cable tapping
Automatically adjust the three-phase unbalance degree of the system
Meet the reactive power compensation requirements of the system
Dynamic following to filter out system harmonics
Reduce line losses, save investment, land occupation and maintenance costs
Reduce the additional line losses caused by power quality issues
Reduce investment costs: Lower the costs of capacitor compensation cabinets, active power filters, and three-phase unbalance regulation equipment
Save floor space: The module integration and reasonable design maximize the overall space utilization of the box, saving the separate installation space for other equipment
Reduce maintenance costs: Modular design, intelligent working mode, extend the lifespan of the entire machine, and reduce maintenance costs
SDUR power distribution component
Supports multiple tap branch options, including 1-to-2, 1-to-4, 1-to-6, and can also be configured as required
The hierarchical design is isolated and independent from the power quality management module
Compact structure, simple and convenient wiring for incoming and outgoing lines

Comparison of Comprehensive Power Quality Management Schemes

Performance items	Conventional cable tapping + capacitor compensation + active power filtering + three-phase unbalance regulation	5DUR three-phase unbalanced cable distribution box
Compensation method	Multiple control units, grouped and stepped switching	Integrated intelligent control, stepless adjustment
Reactive power output	There is a compensation blind zone in the grouped output	Linear output, no blind zone
Reactive power compensation	Around 0.00 to 0.95	- 1.00 ~ + 1.00
Response time	The comprehensive response time is greater than 20ms	⩽5ms
Three-phase balance	Commutation regulation has blind spots and the effect is average	Phase-by-phase regulation has achieved remarkable results
Investment cost	high	low
Number of devices	Four sets of equipment operate independently	One set of equipment has four functional uses
Operation and maintenance	Complex and cumbersome	Simple and easy to operate
Size of land occupied	Four sets of equipment space	One set of equipment space

Model description

SDUR □ – □ / □

- Connect branch circuits
- Rated capacity :kvar
- Rated voltage :kV
- Sanhe Power Tech Treatment three-phase unbalanced cable distribution box

Main technical parameters

Technical item	Parameter
Connect branch circuits	1 to 2, 1 to 4, 1 to 6(configurable as needed)
Rated capacity	50kvar, 75kvar, 100kvar
Rated voltage	400x(1±20%)V
Rated frequency	50x(1±10%)Hz
Phase separation compensation capability	30% ~ 100%
Wiring method	Three-phase four-wire
Harmonic compensation order	2nd to 13th harmonics
The success of the target is attributed to various factors	0.99
Response time	⩽ 5ms
Overload protection	It can be automatically set and adjusted
Noise	<65dB
Working mode	Automatic or manual
Communication interface	RS485
Upper computer program	Optional
Protection grade	IP44(Higher grades can be customized)
Operation display screen	LCD(4.3 inches) touch screen
Altitude requirements	1500m(For every additional 100 meters, the compensation capacity decreases by 1%)
Cooling method	Air-cooled
Size: WxDxH	It is determined based on capacity and branch connections

Work topology diagram

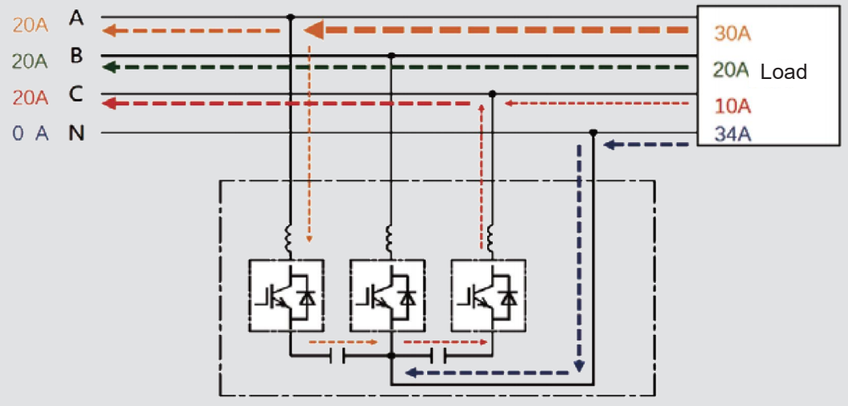

Model description

At present, in the power supply transformer area, parallel capacitors and metering devices are generally placed in JP cabinets for centralized reactive power compensation. However, this method has low compensation accuracy and no treatment function for the lines after the JP cabinet's outgoing lines. The SDUR three-phase unbalance type cable distribution box places the active module at the cable distribution position, effectively expanding the compensation range. It can fully utilize the powerful characteristics of the active module to comprehensively improve the power quality of the line starting from the access point, thereby reducing line losses, lowering line heat generation, and avoiding the high failure rate caused by local unbalance. It is an indispensable part of the future power distribution system An important intelligent power distribution device.


German R&D Center
Thailand Branch
Wuxi Production Base
Shenzhen Headquarters